杭州好力徕机电有限公司

本公司有可能在没有事先预告的情况下更改产品的设计，敬请谅解。
The company may change without prior notice the design of the product, please kindly understand.

DIYUE PRECISION TECHNOLOGY

SIEMEC

DIYUE PRECISION TECHNOLOGY
全球专业伺服电动缸制造商

DI 系列

DH系列

电动缸 直线模组

DIYUE PRECISION TECHNOLOGY

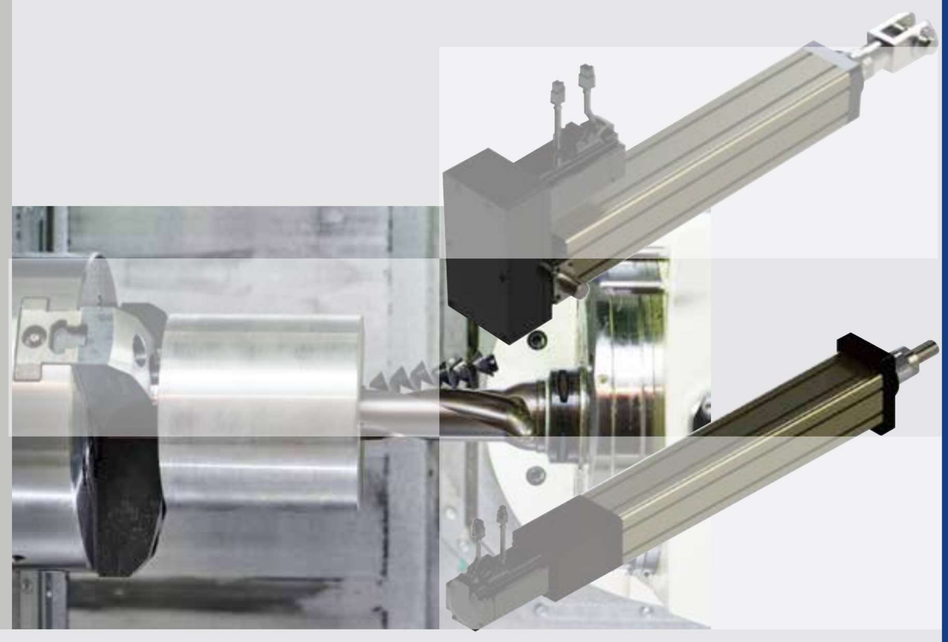

SIEMEC

GLOBAL PROFESSIONAL MANUFACTURER OF PLANETARY REDUCER AND SERVO ELECTRIC CYLINDER

全球专业的行星减速机和伺服电动缸制造商

FOR MORE INFORMATION,PLEASE VISIT
OUR WEBSITE

欲知更多详情，请浏览我们的网站.

18″

EACH 18 SECOADS
ONE MANUFACTURER OF MACHINE OF DECELERATE
IS INSTALLED WORLDWIDE

每18秒就有一台　　专业伺服电动缸在安装

杭州好力徕机电有限公司

全球专业伺服电动缸制造商
Global professional servo electric cylinder manufacturer

公司是专业研发、制造和销售精密齿轮传动、 直线运动和伺服控制设备的中外合资企业。公司秉承　在传动自动化领域　的先进研究与技术水平，不断引进国际最新设计制造工艺，结合市场及用户　　实际需求，设计和制造各种工业传动设备。

生产的产品被业界誉为世界一流产品，　　以其高性能、高品质、高性　价比和技术领先性赢得了顾客高度满意。这是长期不懈致力于新品研发、原有产品不断改良进化所取得的成果，而且我们不断探索精密传动产品、伺服控制产品在各领域中的潜在应用，从“存在激烈价格竞争的通用型产品”到“高附加值、高品质、高性能的产品”，应有尽有。

公司在美国、中国、印度、德国设立了四大技术中心及生产基地，来满足各自市场的不同需求。生产、市场推广紧密联　系，并且实现了信息共享。公司坚信“用国际品质才能赢得国内市场”，在　技术、设备和管理等方面完全与美国接轨。　　产品与美国GE、法国 alstom、德国西马克、德国海德堡、法国拉法基、台泥和日本的三菱重工、　日立、住友、中联、三一、中船、宝钢等著名跨国公司建立合作关系。

随着企业管理的优化提升和公司综合素质的不断提高，有力地推动和促进了企业整体经济效益的持续快速增长。展望未来，　　公司豪情满怀，信心百倍。把我们的产品投向世界各地，服务全球，推动　全球机械工业进步和发展。

Precision Technology (Suzhou) Co., Ltd is a joint venture with its specialties in R&D, manufacturing and sales of precision gear drive, linear motion and servo control devices. In accordance with advanced research and technology level of the　of US in drive automation industry,　keeps bringing in newest design and production process in the world, in order to design and manufacture various industrial drive equipments based on the actual demands of the market and clients.

The　products, which have won high content of the clients with their high performance, high quality and high cost performance, are awarded as the first grade products in the world by the industry. This is resulted from that　is persistently committed to new products R&D, original products improving and upgrading. We keep developing potential applications of precision drive productions and servo control products in various fields, so　has all products that are necessary by the industry, i.e. from “general products with fierce price competition” to “high additive value, high quality, and high performance products”, etc.

has founded four technology center and productions bases in US, China, India and Germany to meet different demands from various markets. The R&D, sales, production and marketing of　are high connected with each other and information is shared promptly within the organization. We firmly believe that “only with international quality could we win domestic market”, as a result, our technolo-gy, equipments and management are highly in line with　of the US.　has established cooperation relationship with a large number of well known multina-tional companies such as GE of the US, Alstom and Lafarge of France, SMS, Heidelberg of Germany, TCC of Taiwan, Mitsubishi, Hitachi and Sumitomo of Japan, Zoomlion, Sany, CSIC and Baosteel of China, etc.

As our company management is keeping optimizing and our comprehensive competence is keeping improving, the whole economic benefits and profitability of the company are increased at a fast pace continuously. Looking forward to the future,　Precision Technology (Suzhou) Co., Ltd is full of pride and confidence. We will deliver our products and services all around the world to promote the progress and development of engineering industry of the World.

COMPANY STRENGTH
加工实力

进口的数控加工设备，保证每一个配件的精度，高要求的管理水平，是我们提供每一台产品的必然保证。

R & D STRENGTH
研发实力

齿轮箱产品被业界誉为世界一等品，以其高性能、高品质、高性价比和技术领先性赢得 了顾客高度满意。这是　　长期不懈致力于新品研发、原有产品不断改良进化所取得的成　果，而且我们不断探索齿轮传动产品、伺服控制产品在各领域中的潜在应用，从“存在激烈 价格竞争的通用型产品”到“高附加值、高品质、高性能”的产品　　应有尽有。

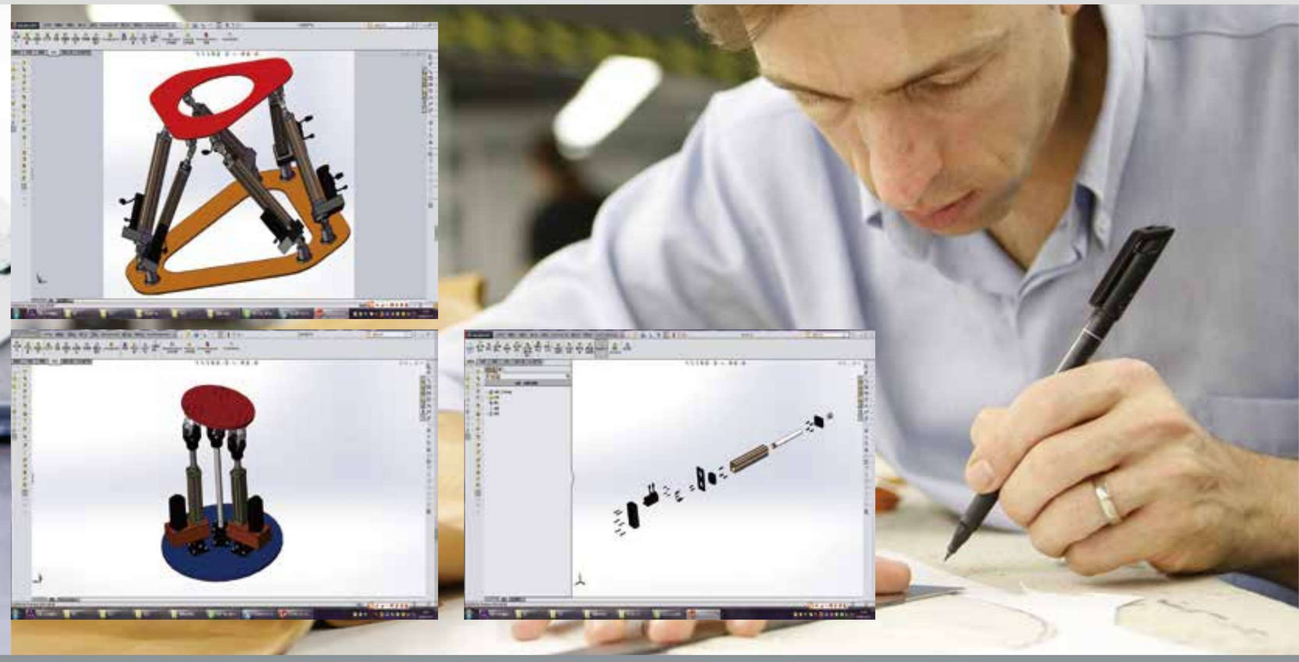

Imported CNC processing equipment, ensure the accuracy of every parts, high requirements of the management level, provide necessary guarantee for the products provided by us.

The　　products, which have won high content of the clients with their high performance, high quality and high cost performance, are awarded as the first grade products in the world by the industry. This is resulted from that　　is persistently committed to new products R&D, original products improving and upgrad-ing. We keep developing potential applications of precision drive productions and servo control products in various fields, so　　has all products that are necessary by the industry, i.e. from “general products with fierce price competition” to “high additive value, high quality, and high performance products”, etc.

Professional testing experiment
Quality is more important than everything

专业检测实验/质量重于一切

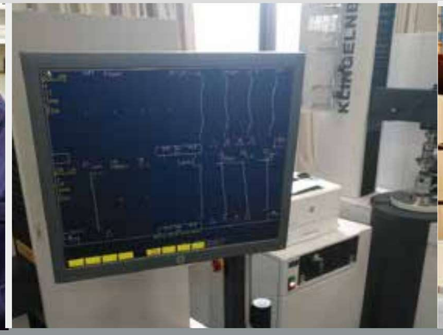

公司在美国、中国、印度、德国设立了四大技术中心及生产基地，来满足各自市场的不同需求。　　公司的研发与销售、生产、市场推广 紧密联系，并且实现了信息共享。

本公司实施的过程，以确保最大限度满足客户的需求，向客户提供满意的服务体系，让客户能够在购物和售后过程中体验专业的服务。

Creation，Innovation，Improvement

创建、创新、改进

超高精度的检测设备，全流程的检验手段，是每一个产品质量合格的保证

Super high precision testing equipment adn whole inspection guarantees produvt quality.

has founded four technology center and productions bases in US, China, India and Germany to meet different demands from various markets. The R&D, sales, production and marketing of are high connected with each other and information is shared promptly within the organization.

We are doing our best to meet cilents' demands to the largest extent and provide satisfying service system, so our clients could experience professional services in purchasing and after sales process.

PROFESSIONAL MANUFACTURER OF MACHINE OF DECELERATE OF PLANET OF AROUND THE WORLD

SIEMEC

SERVO ELECTRIC CYLINDER

伺服电动缸

结构特点 STRUCTURAL CHARACTERISTICS

电动缸是将电机正反旋转运动通过丝杠和丝杠副的机械运动转换为往返直线运动。利用伺服电机的闭环控制特性，可以很方便的实现对推力、速度和位置的精密控制；利用现代运动控制技术、数控技术及总线（网络）技术，实现程序化、总线（网络）化控制。由于其控制、使用的方便性，将实现气缸和液压缸传动所不能实现的精密运动控制。

Electric cylinder transforms forward and backward rotation motion of motor into reciprocating linear motion by the movement of lead screw and auxiliary screw. With the colosed-loop control characteristics of servo motor, it is very convenient to achieve the precise control of thrust, velocity and position; and with modern motion control technology, numerical control technology and BUS control technology, it is possible to realize program control and BUS control. Due to the convenience of the control and usage of electric cylinder, it could realize the precision motion control which could not be realized by air cylinder and hydraulic cylinder.

DI/DH SERIES advantage
DI/DH系列优势

01

机械结构紧凑、体积小、设计原理简单

The mechanical structure is compact, the volume is small, the design principle is simple

02

效率高、响应速度快、惯量低、噪音低

The high efficiency, fast response speed, low inertia, low noise

03

性能可靠、保护功能完善、使用寿命长、节能环保

The perfect protection function, reliable performance, long service life,

04

同时替换应用滚珠和滚柱丝杠

At the same time the replacement application of ball and roller screw

05

安装、调试、操作和维护，简单、方便

Installation, commissioning, operation and maintenance, simple and convenient

同轴直线式电动缸
Coaxial linear electric cylinder

本系列电动缸集成了交流伺服电机、伺服驱动器、高精度滚珠丝杠、模块化设计等技术，整个电动缸具有结构紧凑、惯性小、响应快、低噪音和长寿命等优点。伺服电机与电动缸的传动丝杠直接相连接，使伺服电机的编码器直接反馈电动缸移动活塞的位移量，减少了中间环节的惯量的间隙，提高了控制性和控制精度。伺服电机与电动缸整体相连，安装容易、设计简单、使用方便。电动缸的主要零部件均采用国外名牌产品，性能稳定、故障率低、可靠性高。

This series of electric cylinder integrated AC servo motor, servo drive, high precision ball screw and modular design technology. The electric cylinder has the features of compact structure, small inertia, low noise and long life, etc. Servo motor is connected directly with the transmission screw of the electric cylinder, which allows the encoder of the servo motor to give direct feedback on the displacement quantity of the moving piston of the electric cylinder and reduces the gap of the inertia of the intermediate links, and improves the control and its precision. The servo motor is connected directly with the electric cylinder and is easy to install, easy to design and convenient to use. Main parts of the electric cylinder are using renown offshore products, which ensures its stable performance, low failure ratio and high reliability.

同步带折返式电动缸
Synchronous belt return type electric cylinder

折返式电动缸由于整体长度短，适用于安装位置比较小的场合。同时本方案选用的同步带与齿轮箱，具有强度高、间隙小、寿命长的特点，使整个电动缸具有较高的控制精度。伺服电机与电动缸配合灵活，安装容易、设定简单、使用方便。

Due to the short integral length, the reciprocating electric cylinder is suitable for the occasions where the installation position is relatively small. At the same time, this scheme adopts the synchronous belt and gear box, which has the characteristics of high strength, small clearance and long service life, so that the whole electric cylinder has high control precision. Servo motor and electric cylinder with a flexible, easy to install, easy to set, easy to use.

特殊制作（可选配）SPECIAL PRODUCTION(OPTIONA)

材料及表面处理
Materials and surface treatment

外壳：高强度航空铝合金，硬质氧化处理，美观大方。
活塞杆：镀铬合金钢，耐腐蚀，高强度。
Shell: high strength aviation aluminum alloy, hard oxidation treatment, beautiful and generous.
Piston rod: chrome alloy steel, corrosion resistance, high strength.

导向机构及定位
Guide mechanism and positioning accuracy

一般情况下按重复考虑选择，同时考虑电机的精度。直线度不应以电动缸的推杆作为导向，客户应设计自己的导向机构。
电机并联比直联精度会降低因为中间经过同步带或者行星减速机。

Under normal circumstances, the accuracy of the motor is selected according to the repeated consideration. Straight line should not be driven by the electric cylinder of the push rod, the customer should design their own guide.
The accuracy of the parallel connection of the motor is reduced because of the intermediate passing through the synchronous belt or the planet speed reducer.

速度
Speed

高速运动（大于 200mm/s）时需要特别考虑寿命。同时承载能力和精度都会有所下降。

High speed motion (greater than 200mm/s)requires special consideration of lifetime. At the same time, the carrying capacity and the precision will be decreased.

行程
Trip

电动缸选型时的行程应比实际使用的有效行程大 20mm 至 50mm，是为推杆碰到限位开关后减速停下留下的空间。速度越快，空间越大。

Electric cylinder type selection of the stroke should be more than the actual use of the effective stroke 20mm to 50mm, is for the push rod to touch the limit switch to stop the space behind. The faster the speed, the greater the space.

推力
Thrust

电机并联时，选择齿轮传动要比同步带传动时，推力更大。

When the motor is connected in parallel, the selection of gear transmission is more than that of the synchronous belt drive.

运行周期
Operation period

使用滚珠丝杠可频繁运行（大于 50%）或连续运行。

Ball screw can be used frequently (more than 50%) or continuous operation.

电机选择
Motor selection

交流伺服电机精度高、速度快、推力大、不丢步。
步进电机精度较高、速度慢、推力不太大（小于 600KG。）
普通直流电机可以调速，不能定位。
普通异步交流电机不能调速和定位。

AC servo motor with high precision, high speed, large thrust, not lost step.
Stepper motor with high precision, slow speed, thrust is not too large (less than 600KG.)
Ordinary DC motor speed control, can not be positioned.
General asynchronous AC motor can not speed and positioning.

01

特殊安装、防护、防尘、防潮

Special installation, protection, dust, moisture

02

高低温环境

High and low temperature environment

03

海上防水、防爆作业

Waterproof, anti explosion operation at sea

04

配线性唯一传感器

Wiring displacement sensor

05

配压力传感器

With pressure sensor

06

可抗回转机构

Anti rotation mechanism

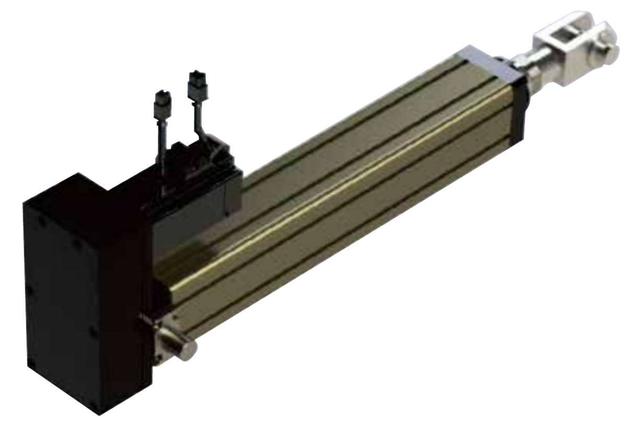

07

配行星减速机

With planetary reducer

08

电机：伺服电机、直流伺服电机、步进电机、直流电机、交流变频电机等。

Motor: servo motor, DC servo motor, stepper motro, DC motor, AC variable frequency motor, etc..

电机输出扭矩与电动缸输出力的关系

RELATIONSHIP BETWEEN OUTPUT TORQUE OF MOTOR AND OUTPUT FORCE OF ELECTRIC CYLINDER

$$F=T\times\eta\times2\pi\times R/L$$

F：电动缸输出力，单位：KN 千牛	F: electric cylinder output force, unit: KN kn
T：电机输出扭矩，单位：Nm 牛米	T: motor output torque, unit: Nm cattle.
R：减速比	R: reduction ratio
L：丝杠导程，单位：mm	L: lead screw guide, unit: mm
η：效率（一般选择电动缸的总效率85%，但是效率根据实际使用工况会有变化，请注意）	ETA: efficiency (generally 85%, the total efficiency of the electric cylinder but the efficiency according to the actual use conditions will change, please note)

电动缸的寿命计算

LIFE CALCULATION OF 2 ELECTRIC CYLINDER

电动缸的寿命一般是指电动缸内部使用的丝杠寿命，可分为两部分，一是丝杠的疲劳寿命，它可以通过计算得出；另一个是使用寿命，取决于使用条件（如温度、灰尘、使用润滑的种类和定期保养的频率等等）。使用寿命往往通过经验得出。

Electric cylinder life generally refers to the use of electric cylinder internal screw life can be divided into two parts, one is the fatigue life of the screw, it can be obtained by calculation; another is the service life depends upon to use conditions (such as temperature, dust, use kinds of lubricating and regular maintenance frequency and so on).

使用寿命往往通过经验得出。以下是电动缸的疲劳寿命计算方法。

Life is often obtained by experience. The following is the calculation method of the fatigue life of the electric cylinder.

$$L10=(CA/FM)^3\times L$$

L10:电动缸的寿命，单位：km	L10: electric cylinder life, unit: km
Fm:电动缸承受的平均负载，单位：KN	Fm: electric cylinder bear the average load, unit: KN
Ca:丝杠螺母的基本额定动负载，单位：KN (可通过丝杠样本查出)	Ca: screw nut of the basic rated dynamic load, unit: KN (can be detected through the screw sample)
L: 丝杠导程，单位：mm	L: lead screw guide, unit: mm

平均负载的计算

THE CALCULATION OF THE AVERAGE LOAD

平均负载是指电动缸在一个工作循环中，综合在各个不同工作区间的力、速度和时间后得出的立方平均值。

Average load refers to the average of the electric cylinder in a working cycle,the consolidated draw in force,spees and time of the working interval cubic.

电动缸的负载变化
如右图所示

The change in load of the electric cylinder As shown on the right

电动缸的运行速度变化
如右图所示

Changes in the runing speed of the electric cylinder As shown on the right

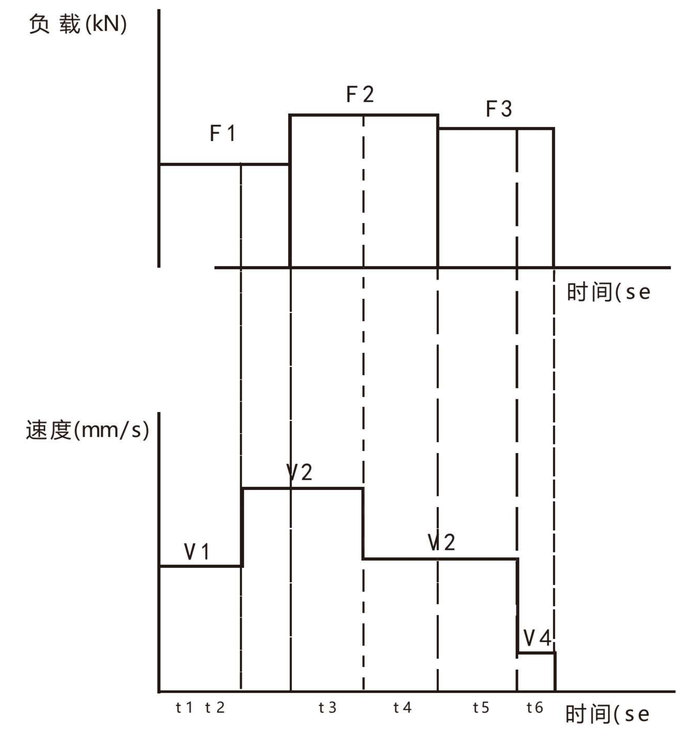

电动缸的平均负载的计算公式如下

The averae load of the electric cylinder is calcuated as follows

$$Fm=\sqrt[3]{\frac{F_1^3\times v_1\times t_1+F_1^3\times v_2\times t_2+F_2^3\times v_2\times t_3+F_2^3\times v_3\times t_4+F_2^3\times v_3\times t_4+F_3^3\times v_3\times t_5+F_3\times v_4\times t_6}{v_1\times t_1\times v_2\times t_2+v_2\times t_3+v_3\times t_4+v_3\times t_5+v_4\times t_6}}$$

安装附件
MOUNTING ACCESSORIES

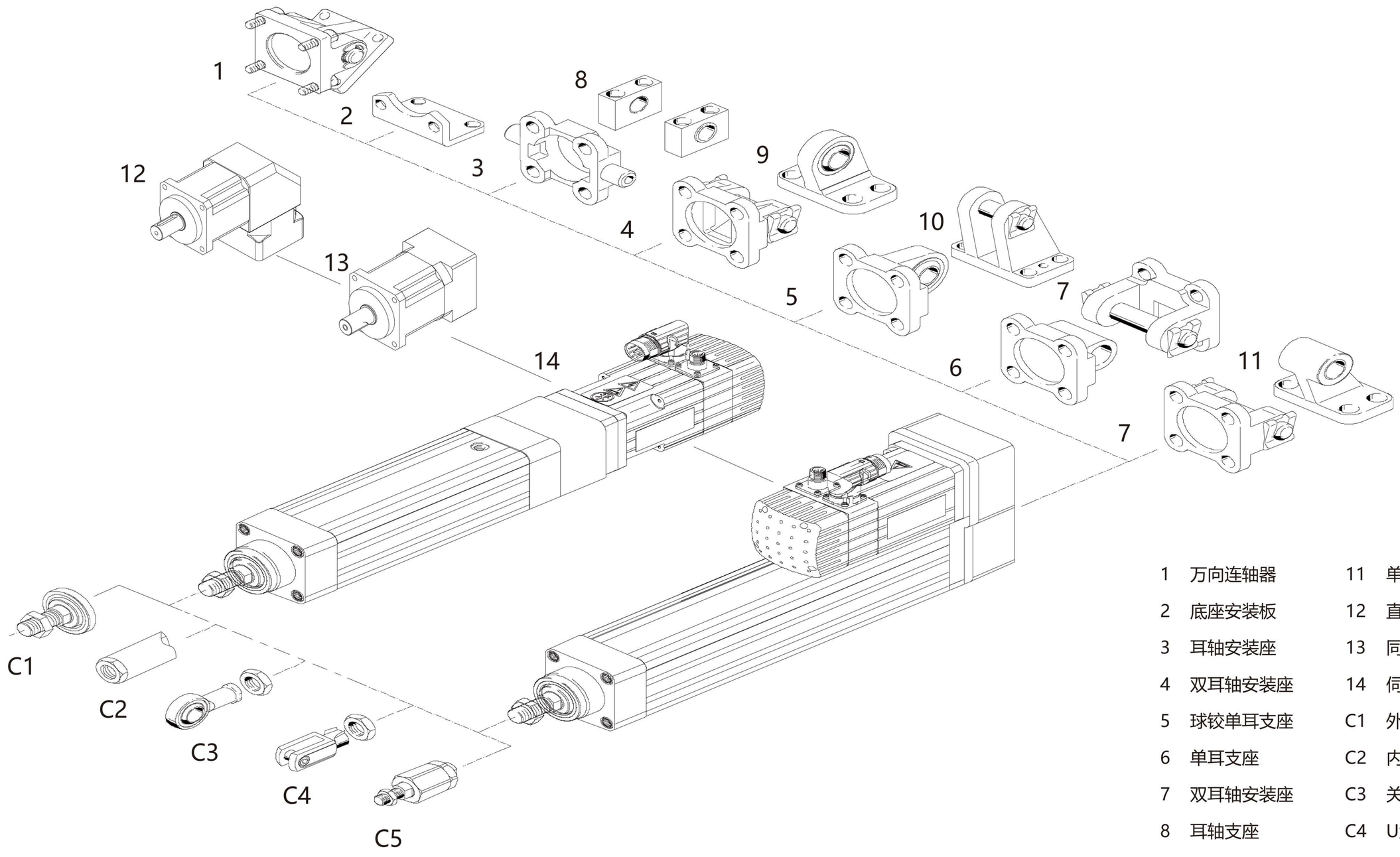

1	万向连轴器	11	单耳轴支座
2	底座安装板	12	直角减速机
3	耳轴安装座	13	同轴减速机
4	双耳轴安装座	14	伺服电机
5	球铰单耳支座	C1	外螺纹输出连接
6	单耳支座	C2	内螺纹输出连接
7	双耳轴安装座	C3	关节轴承连接
8	耳轴支座	C4	U型插销连接
9	鱼眼单耳支座	C5	浮动螺纹接头
10	双耳环安装件		

安装型式
MOUNTING TYPE

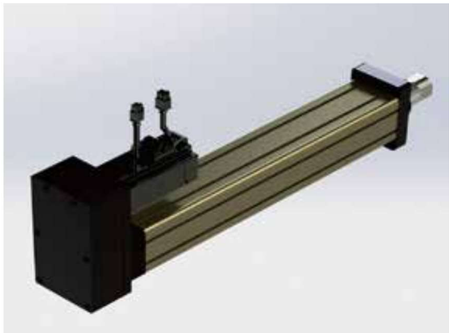

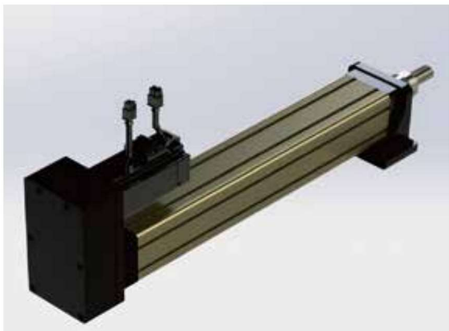

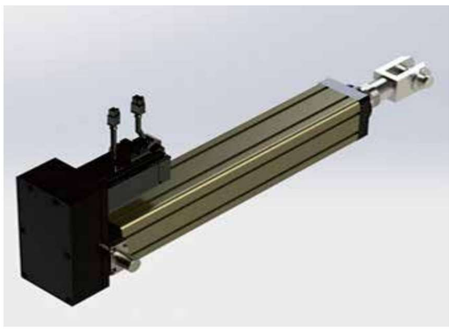

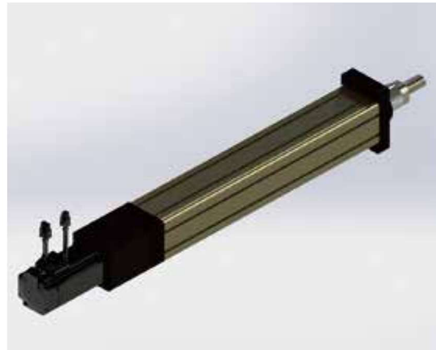

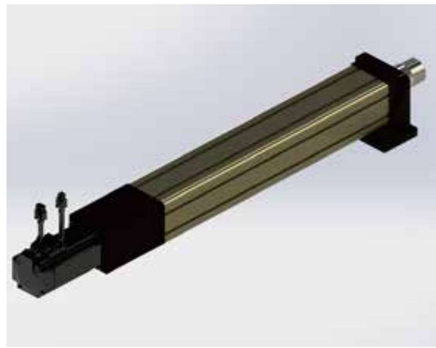

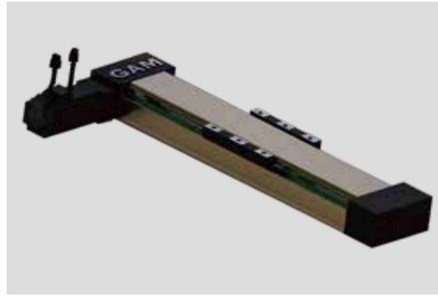

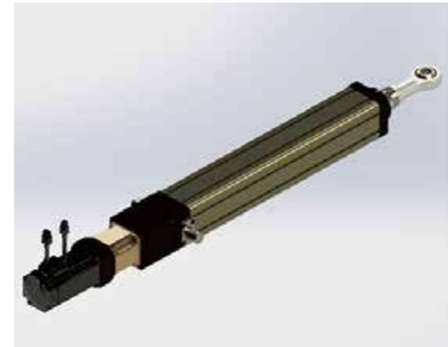

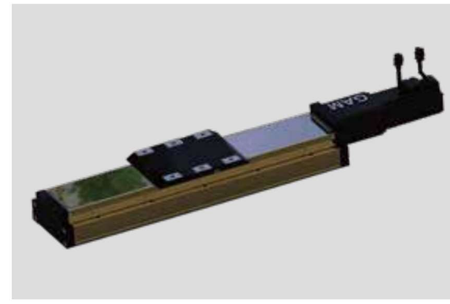

订货型号表示
ORDERING REPRESENTATION

DI95	S200	T	R10	M1	C1	P2	机电型号
a	b	c	d	e	f	g	h

a.电缸型号 Electric cylinder

DI 50、DI65、DI75、DI95
DI110、DI145、DI190、DI250

b.行程 Trip

DI 50:0-800mm、DI65:0-1200mm
DI75:0-1500mm、DI95:0-1800mm
DI110:0-1800mm、DI145:0-2200mm
DI190:0-3000mm、DI250:0-3000mm

c.活塞杆防转 Output mode

- T：防转 Anti rotation
- R：不防转 Non anti rotation

d.丝杆导程 Lead screw guide

DI 50:5,10、DI65:5,10,16,20
DI75:5,8,10,20,25、DI95:5,8,10,20,32
DI110:5,8,10,20,40、DI145:5,10,12,20,50
DI190:10,16,20,25、DI250:10,16,20,40

e.安装方式 Installation

- M1：前输出法兰
- M2：卧式底座
- M3：前螺纹法兰
- M4：后法兰耳轴

f.输出连接方式 Output connection mode

- C1：外螺纹
- C2：内螺纹
- C3：关节轴承
- C4：U型插销
- C5：浮动接头

g.丝杆产地 Origin of silk

- P1：德国 Germany
- P2：台湾 Taiwan

h.电机型号及品牌 Motor model and brand

台达、松下、安川、三菱
西门子、伦茨、AB

订货型号表示
ORDERING REPRESENTATION

DH95	S200	T	R10	M1	C1	P2	机电型号
a	b	c	d	e	f	g	h

a.电缸型号 Electric cylinder

DH50、DH65、DH75、DH95
DH110、DH145、DH190、DH250

b.行程 Trip

DH50:0-800mm、DH65:0-1200mm
DH75:0-1500mm、DH95:0-1800mm
DH110:0-1800mm、DH145:0-2200mm
DH190:0-3000mm、DH250:0-3000mm

c.活塞杆防转 Output mode

- T：防转 Anti rotation
- R：不防转 Non anti rotation

d.丝杆导程 Lead screw guide

DH50:5,10、DH65:5,10,16,20
DH75:5,8,10,20,25、DH95:5,8,10,20,32
DH110:5,8,10,20,40、DH145:5,10,12,20,50
DH190:10,16,20,25、DH250:10,16,20,40

e.安装方式 Installation

- M1：前输出法兰
- M2：卧式底座
- M3：前螺纹法兰
- M4：后法兰耳轴

f.输出连接方式 Output connection mode

- C1：外螺纹
- C2：内螺纹
- C3：关节轴承
- C4：U型插销
- C5：浮动接头

g.丝杆产地 Origin of silk

- P1：德国 Germany
- P2：台湾 Taiwan

h.电机型号及品牌 Motor model and brand

台达、松下、安川、三菱
西门子、伦茨、AB

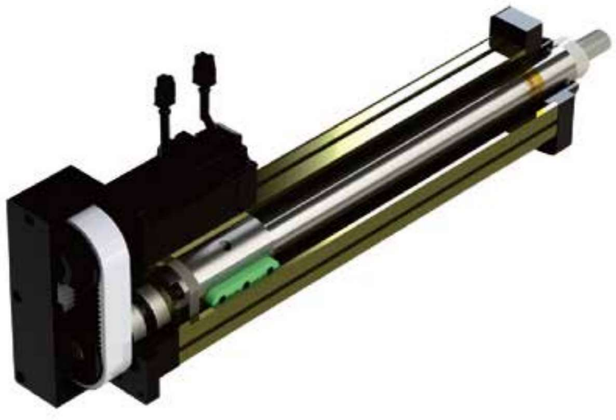

产品代号 PRODUCT CODE

DI40/DH40 伺服电动缸选型参数表

DI40/DH40 servo electric cylinder parameter list selections

电机连接形式 Motor connection		同轴直线式 Coaxial linear							
减速比 Reduction ratio		1		3		5		7	
丝杆导程 Screw lead	mm	5							
伺服电机功率 Servo motor power	KW	0.75	1.00	0.20	0.40	0.10	0.20	0.10	0.20
伺服电机扭矩 Servo motor torque	N.M	2.40	3.18	0.64	1.30	0.32	0.64	0.32	0.64
伺服电机转速 Servo motor speed	r/min	3000							
电动缸推力 Thrust electric cylinder	KN	2.56	3.39	2.05	4.16	1.71	3.42	2.39	4.78
电动缸承受推力 Withstanding thrust electric cylinder	KN	3							
电缸额定速度 Electric cylinder rated speed	mm/s	250		80		50		35	

电机连接形式 Motor connection		同步带折返式 Timing belt Turn-back type									
减速比 Reduction ratio		1		2		3		5		7	
丝杆导程 Screw lead	mm	5									
伺服电机功率 Servo motor power	KW	0.75	1.00	0.40	0.75	0.20	0.40	0.10	0.20	0.10	0.20
伺服电机扭矩 Servo motor torque	N.M	2.40	3.18	1.30	2.40	0.64	1.30	0.32	0.64	0.32	0.64
伺服电机转速 Servo motor speed	r/min	3000									
电动缸推力 Thrust electric cylinder	KN	2.56	3.39	2.78	5.12	2.05	4.16	1.71	3.42	2.39	4.78
电动缸承受推力 Withstanding thrust electric cylinder	KN	3									
电缸额定速度 Electric cylinder rated speed	mm/s	250		125		80		50		35	

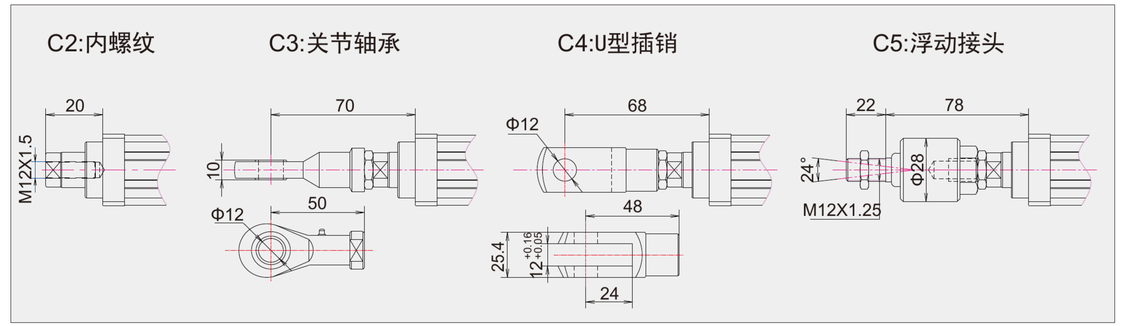

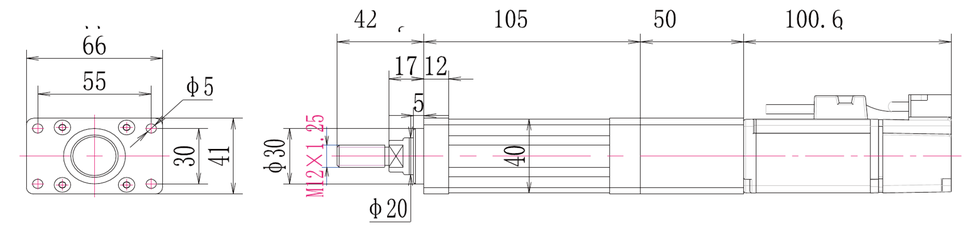

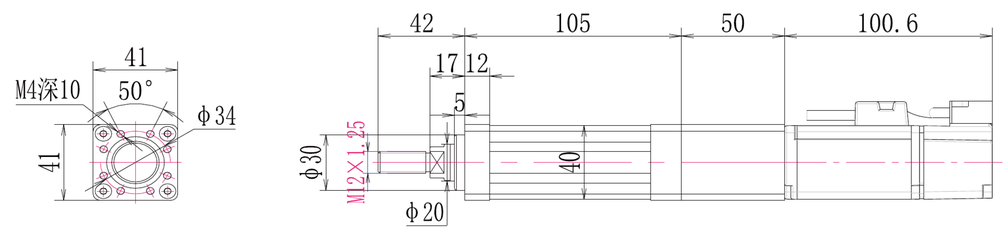

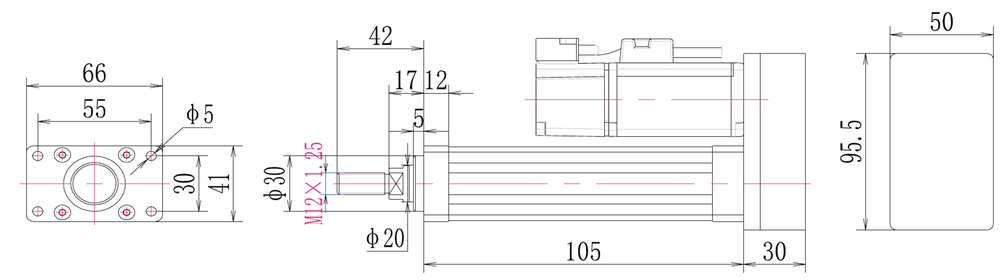

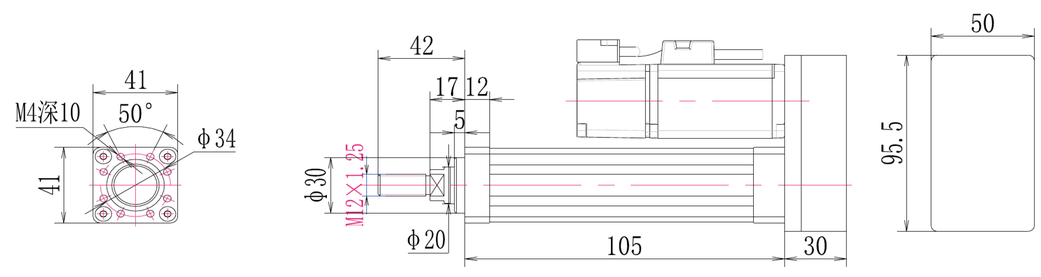

DI50/DH50 伺服电动缸选型参数表

DI50/DH50 servo electric cylinder parameter list selections

电机连接形式 Motor connection		同轴直线式 Coaxial linear							
减速比 Reduction ratio		1		3		5		7	
丝杆导程 Screw lead	mm	5							
伺服电机功率 Servo motor power	KW	0.75	1.00	0.20	0.40	0.10	0.20	0.10	0.20
伺服电机扭矩 Servo motor torque	N.M	2.40	3.18	0.64	1.30	0.32	0.64	0.32	0.64
伺服电机转速 Servo motor speed	r/min	3000							
电动缸推力 Thrust electric cylinder	KN	2.56	3.39	2.05	4.16	1.71	3.42	2.39	4.78
电动缸承受推力 Withstanding thrust electric cylinder	KN	3							
电缸额定速度 Electric cylinder rated speed	mm/s	250		80		50		35	

电机连接形式 Motor connection		同步带折返式 Timing belt Turn-back type									
减速比 Reduction ratio		1		2		3		5		7	
丝杆导程 Screw lead	mm	5									
伺服电机功率 Servo motor power	KW	0.75	1.00	0.40	0.75	0.20	0.40	0.10	0.20	0.10	0.20
伺服电机扭矩 Servo motor torque	N.M	2.40	3.18	1.30	2.40	0.64	1.30	0.32	0.64	0.32	0.64
伺服电机转速 Servo motor speed	r/min	3000									
电动缸推力 Thrust electric cylinder	KN	2.56	3.39	2.78	5.12	2.05	4.16	1.71	3.42	2.39	4.78
电动缸承受推力 Withstanding thrust electric cylinder	KN	3									
电缸额定速度 Electric cylinder rated speed	mm/s	250		125		80		50		35	

电机连接形式 Motor connection		同轴直线式 Coaxial Linear							
减速比 Reduction ratio		1		3		5		7	
丝杆导程 Screw lead	mm	10							
伺服电机功率 Servo motor power	KW	1.50	2.00	0.40	0.75	0.20	0.40	0.20	0.40
伺服电机扭矩 Servo motor torque	N.M	4.77	6.37	1.30	2.40	0.64	1.30	0.64	1.30
伺服电机转速 Servo motor speed	r/min	3000							
电动缸推力 Thrust electric cylinder	KN	2.55	3.40	2.08	3.84	1.71	3.47	2.39	4.86
电动缸承受推力 Withstanding thrust electric cylinder	KN	3							
电缸额定速度 Electric cylinder rated speed	mm/s	500		165		100		70	

电机连接形式 Motor connection		同步带折返式 Timing belt Turn-back type									
减速比 Reduction ratio		1		2		3		5		7	
丝杆导程 Screw lead	mm	10									
伺服电机功率 Servo motor power	KW	1.50	2.00	0.75	1.00	0.40	0.75	0.20	0.40	0.20	0.40
伺服电机扭矩 Servo motor torque	N.M	4.77	6.37	2.40	3.18	1.30	2.40	0.64	1.30	0.64	1.30
伺服电机转速 Servo motor speed	r/min	3000									
电动缸推力 Thrust electric cylinder	KN	2.55	3.40	2.56	3.39	2.08	3.84	1.71	3.47	2.39	4.86
电动缸承受推力 Withstanding thrust electric cylinder	KN	3									
电缸额定速度 Electric cylinder rated speed	mm/s	500		250		165		100		70	

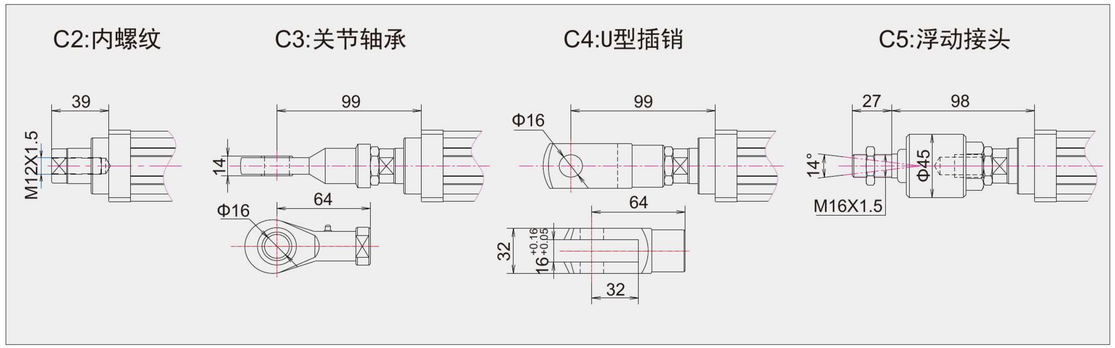

M1:前输出法兰

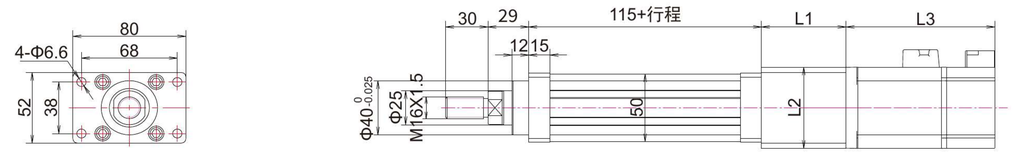

M2:卧式底座

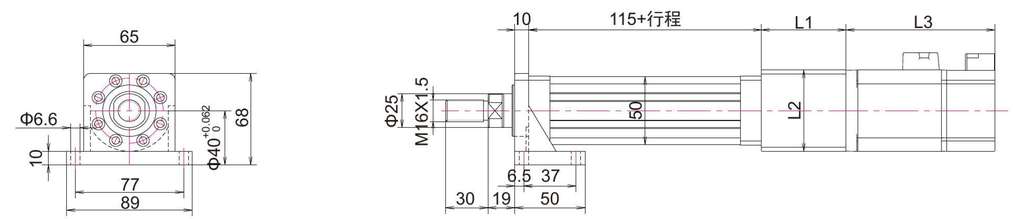

M3:前螺纹法兰

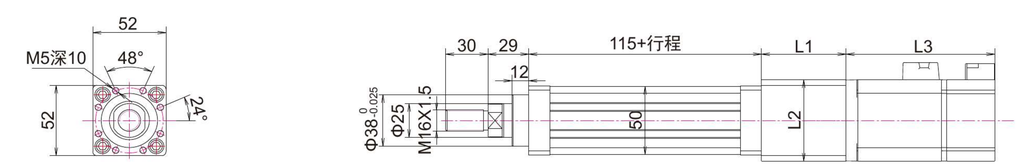

M4:后法兰耳轴

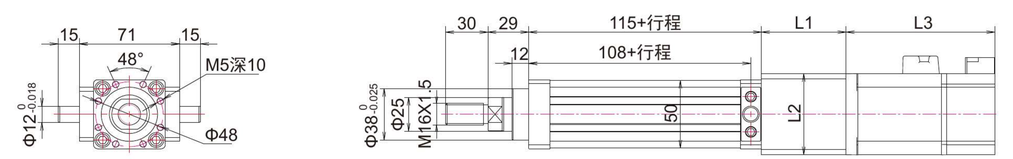

电机法兰	L1	L2	L3
40	60	51	100(请参考电机)
60	60	60	105(请参考电机)
80	70	80	138(请参考电机)

M1:前输出法兰

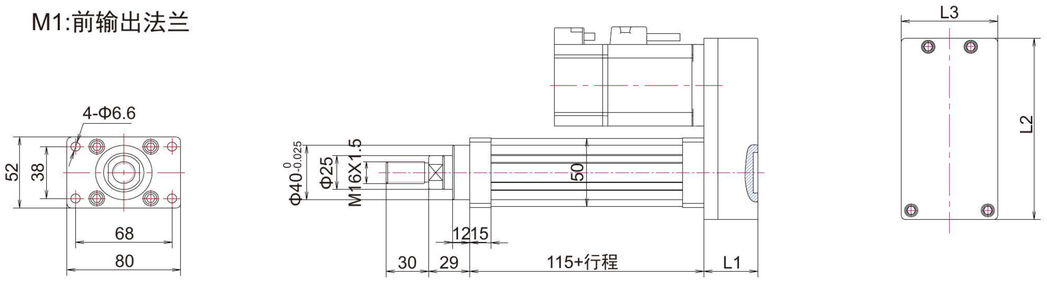

M2:卧式底座

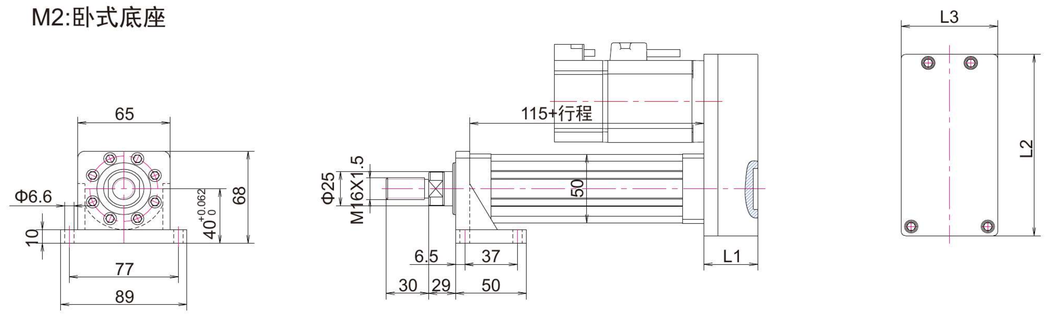

M3:尾部单耳轴

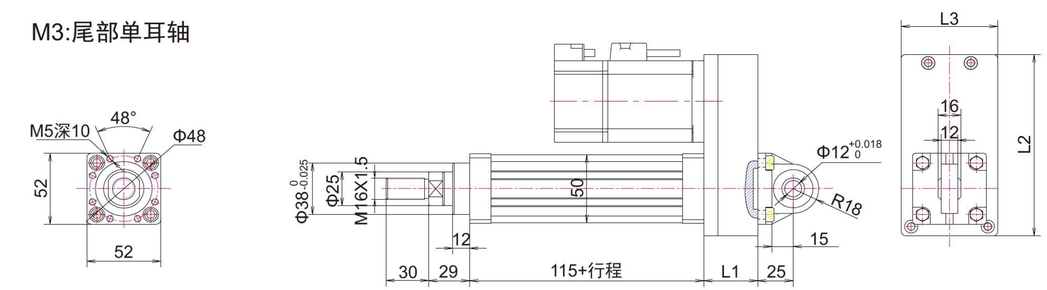

M4:后法兰耳轴

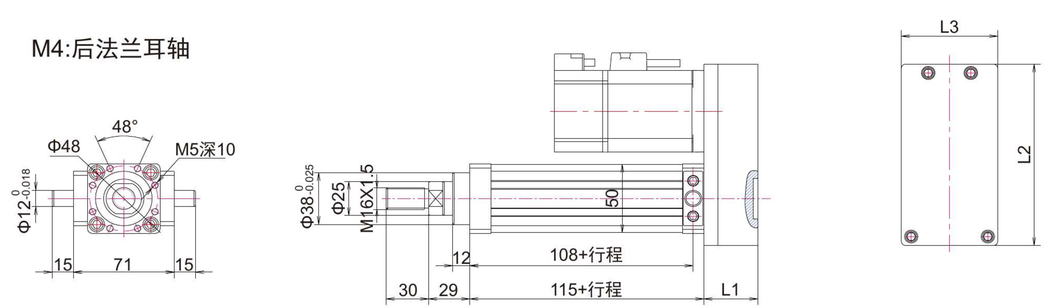

电机法兰	L1	L2	L3
40	38	133	68
60	38	133	68
80	55	177	90

DI65/DH65 伺服电动缸选型参数表

DI65/DH65 servo electric cylinder parameter list selections

电机连接形式 Motor connection		同轴直线式 Coaxial Linear									
减速比 Reduction ratio		1		3		5		7		10	
丝杆导程 Screw lead	mm	5									
伺服电机功率 Servo motor power	KW	1.00	1.50	0.40	0.75	0.20	0.40	0.20	0.40	0.10	0.20
伺服电机扭矩 Servo motor torque	N.M	3.18	4.77	1.30	2.40	0.64	1.30	0.64	1.30	0.32	0.64
伺服电机转速 Servo motor speed	r/min	3000									
电动缸推力 Thrust electric cylinder	KN	3.39	5.09	4.16	7.69	3.42	6.94	4.78	9.72	3.42	6.83
电动缸承受推力 Withstanding thrust electric cylinder	KN	5									
电缸额定速度 Electric cylinder rated speed	mm/s	250		80		50		35		25	

电机连接形式 Motor connection		同步带折返式 Timing belt Turn-back type											
减速比 Reduction ratio		1		2		3		5		7		10	
丝杆导程 Screw lead	mm	5											
伺服电机功率 Servo motor power	KW	1.00	1.50	0.40	0.75	0.40	0.75	0.20	0.40	0.20	0.40	0.10	0.20
伺服电机扭矩 Servo motor torque	N.M	3.18	4.77	1.30	2.40	1.30	2.40	0.64	1.30	0.64	1.30	0.32	0.64
伺服电机转速 Servo motor speed	r/min	3000											
电动缸推力 Thrust electric cylinder	KN	3.39	5.09	2.78	5.12	4.16	7.69	3.42	6.94	4.78	9.72	3.42	6.83
电动缸承受推力 Withstanding thrust electric cylinder	KN	5											
电缸额定速度 Electric cylinder rated speed	mm/s	250		125		80		50		35		25	

电机连接形式 Motor connection		同轴直线式 Coaxial Linear									
减速比 Reduction ratio		1		3		5		7		10	
丝杆导程 Screw lead	mm	10									
伺服电机功率 Servo motor power	KW	2.00	3.00	0.75	1.00	0.40	0.75	0.40	0.75	0.20	0.40
伺服电机扭矩 Servo motor torque	N.M	6.37	9.55	2.40	3.18	1.30	2.40	1.30	2.40	0.64	1.30
伺服电机转速 Servo motor speed	r/min	3000									
电动缸推力 Thrust electric cylinder	KN	3.40	5.10	3.84	5.09	3.47	6.41	4.86	8.97	3.42	6.94
电动缸承受推力 Withstanding thrust electric cylinder	KN	5									
电缸额定速度 Electric cylinder rated speed	mm/s	500		165		100		70		50	

电机连接形式 Motor connection		同步带折返式 Timing belt Turn-back type											
减速比 Reduction ratio		1		2		3		5		7		10	
丝杆导程 Screw lead	mm	10											
伺服电机功率 Servo motor power	KW	2.00	3.00	1.00	1.50	0.75	1.00	0.40	0.75	0.40	0.75	0.20	0.40
伺服电机扭矩 Servo motor torque	N.M	6.37	9.55	3.18	4.77	2.40	3.18	1.30	2.40	1.30	2.40	0.64	1.30
伺服电机转速 Servo motor speed	r/min	3000											
电动缸推力 Thrust electric cylinder	KN	3.40	5.10	3.39	5.09	3.84	5.09	3.47	6.41	4.86	8.97	3.42	6.94
电动缸承受推力 Withstanding thrust electric cylinder	KN	5											
电缸额定速度 Electric cylinder rated speed	mm/s	500		250		165		100		70		50	

DI65/DH65 伺服电动缸选型参数表

DI65/DH65 servo electric cylinder parameter list selections

电机连接形式 Motor connection		同轴直线式 Coaxial Linear									
减速比 Reduction ratio		1		3		5		7		10	
丝杆导程 Screw lead	mm	16									
伺服电机功率 Servo motor power	KW	4.00	5.00	1.50	2.00	0.75	1.00	0.40	0.75	0.40	0.75
伺服电机扭矩 Servo motor torque	N.M	12.7	15.9	4.77	6.37	2.40	3.18	1.30	2.40	1.30	2.40
伺服电机转速 Servo motor speed	r/min	3000									
电动缸推力 Thrust electric cylinder	KN	4.24	5.30	4.77	6.38	4.00	5.30	3.04	5.60	4.34	8.01
电动缸承受推力 Withstanding thrust electric cylinder	KN	5									
电缸额定速度 Electric cylinder rated speed	mm/s	800		265		160		115		80	

电机连接形式 Motor connection		同步带折返式 Timing belt Turn-back type											
减速比 Reduction ratio		1		2		3		5		7		10	
丝杆导程 Screw lead	mm	16											
伺服电机功率 Servo motor power	KW	4.00	5.00	2.00	3.00	1.50	2.00	0.75	1.00	0.40	0.75	0.40	0.75
伺服电机扭矩 Servo motor torque	N.M	12.7	15.9	6.37	9.55	4.77	6.37	2.40	3.18	1.30	2.40	1.30	2.40
伺服电机转速 Servo motor speed	r/min	3000											
电动缸推力 Thrust electric cylinder	KN	4.24	5.30	4.25	6.37	4.77	6.38	4.00	5.30	3.04	5.60	4.34	8.01
电动缸承受推力 Withstanding thrust electric cylinder	KN	5											
电缸额定速度 Electric cylinder rated speed	mm/s	800		400		265		160		110		80	

电机连接形式 Motor connection		同轴直线式 Coaxial Linear									
减速比 Reduction ratio		1		3		5		7		10	
丝杆导程 Screw lead	mm	20									
伺服电机功率 Servo motor power	KW	4.00	5.00	1.50	2.00	1.00	1.50	0.75	1.00	0.40	0.75
伺服电机扭矩 Servo motor torque	N.M	12.7	15.9	4.77	6.37	3.18	4.77	2.40	3.18	1.30	2.40
伺服电机转速 Servo motor speed	r/min	3000									
电动缸推力 Thrust electric cylinder	KN	3.39	4.24	3.82	5.10	4.24	6.37	4.48	5.94	3.47	6.41
电动缸承受推力 Withstanding thrust electric cylinder	KN	5									
电缸额定速度 Electric cylinder rated speed	mm/s	1000		330		200		140		100	

电机连接形式 Motor connection		同步带折返式 Timing belt Turn-back type											
减速比 Reduction ratio		1		2		3		5		7		10	
丝杆导程 Screw lead	mm	20											
伺服电机功率 Servo motor power	KW	4.00	5.00	2.00	3.00	1.50	2.00	1.00	1.50	0.75	1.00	0.40	0.75
伺服电机扭矩 Servo motor torque	N.M	12.7	15.9	6.37	9.55	4.77	6.37	3.18	4.77	2.40	3.18	1.30	2.40
伺服电机转速 Servo motor speed	r/min	3000											
电动缸推力 Thrust electric cylinder	KN	3.39	4.24	3.40	5.10	3.82	5.10	4.24	6.37	4.48	5.94	3.47	6.41
电动缸承受推力 Withstanding thrust electric cylinder	KN	5											
电缸额定速度 Electric cylinder rated speed	mm/s	1000		500		330		200		140		100	

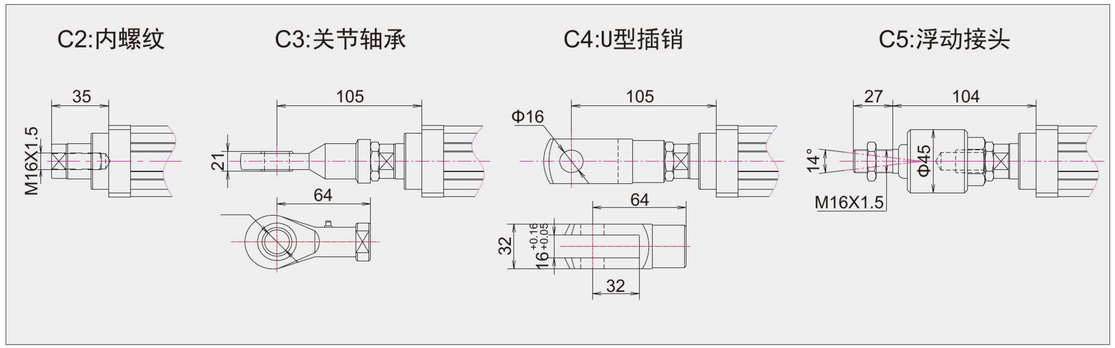

M1:前输出法兰

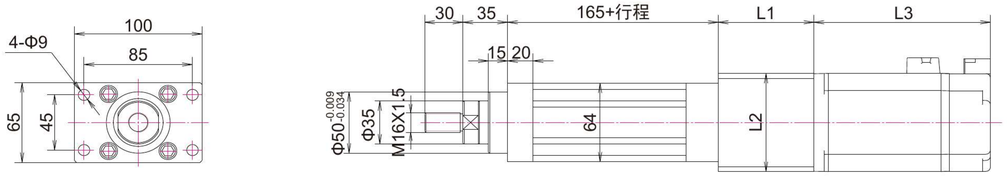

M2:卧式底座

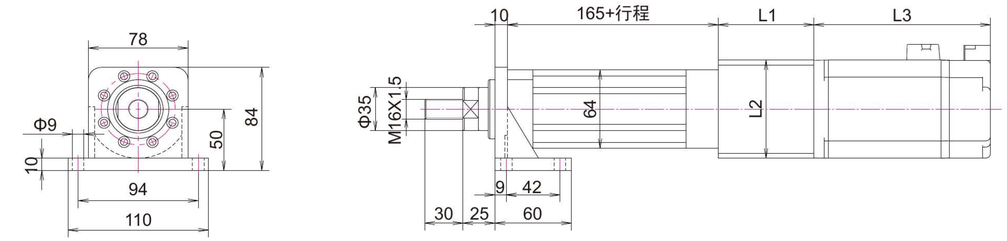

M3:前螺纹法兰

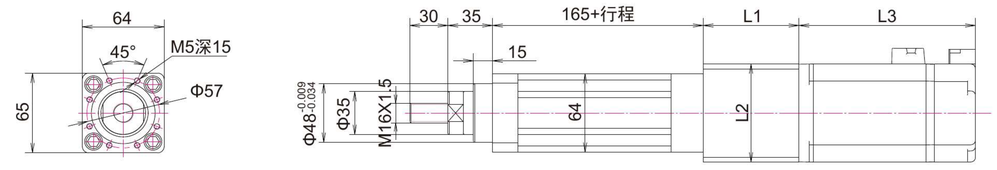

M4:后法兰耳轴

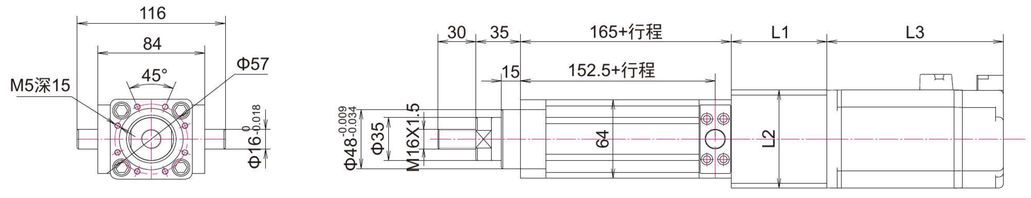

电机法兰	L1	L2	L3
60	70	64	105(请参考电机)
80	75	80	138(请参考电机)
110	98	110	199(请参考电机)

M1:前输出法兰

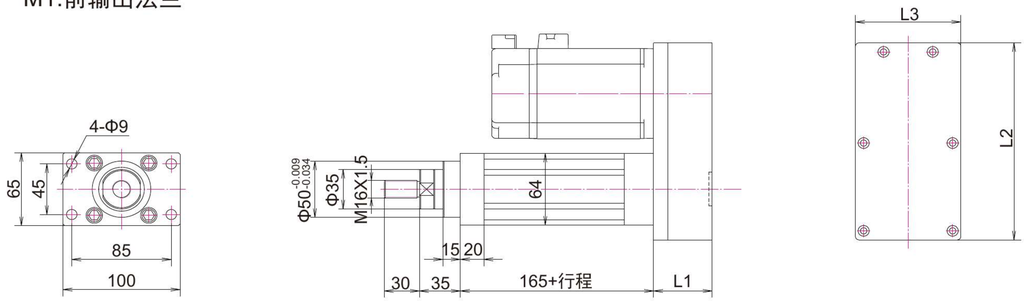

M2:卧式底座

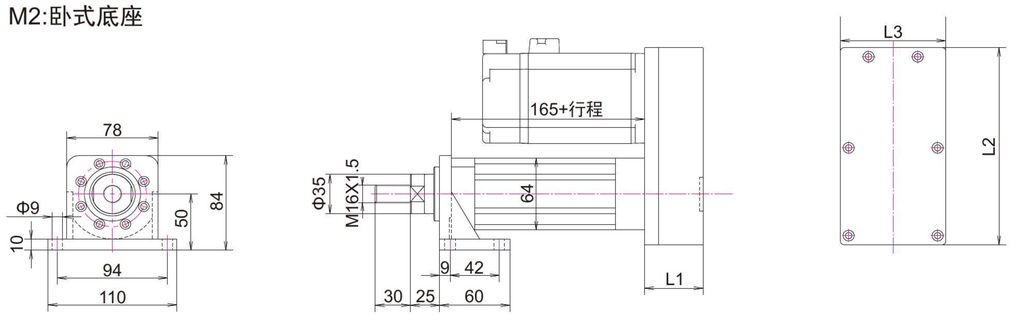

M3:尾部单耳轴

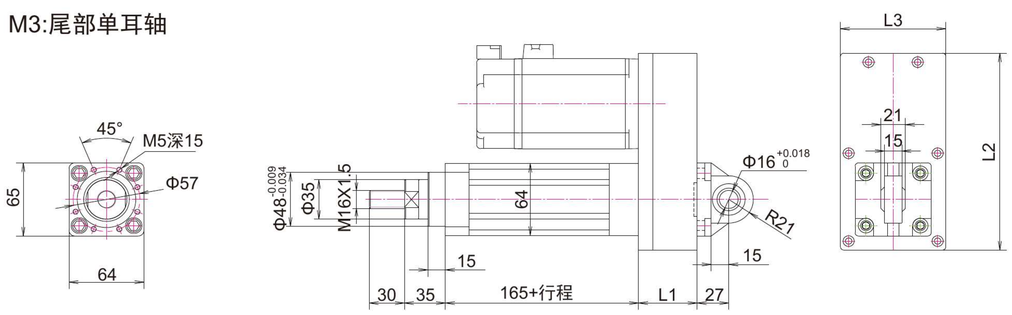

M4:后法兰耳轴

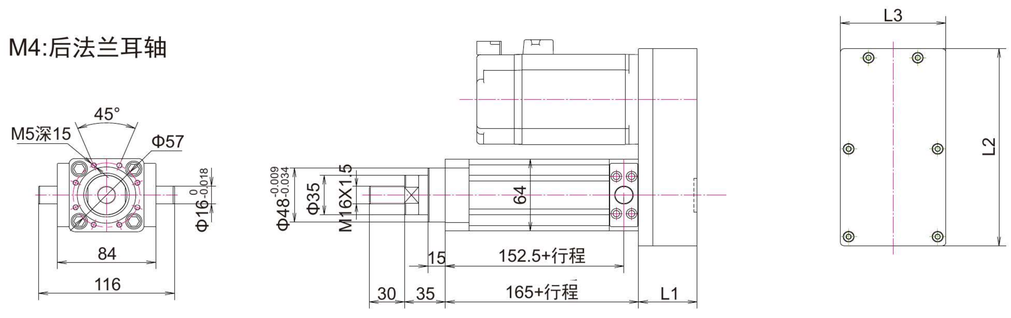

电机法兰	L1	L2	L3
60	55	133	68
80	55	177	90
110	65	205	110

DI75/DH75 伺服电动缸选型参数表

DI75/DH75 servo electric cylinder parameter list selections

电机连接形式 Motor connection		同轴直线式 Coaxial Linear									
减速比 Reduction ratio		1		3		5		7		10	
丝杆导程 Screw lead	mm	5									
伺服电机功率 Servo motor power	KW	2.00	3.00	0.75	1.00	0.40	0.75	0.20	0.40	0.20	0.40
伺服电机扭矩 Servo motor torque	N.M	6.37	9.55	2.40	3.18	1.30	2.40	0.64	1.30	0.64	1.30
伺服电机转速 Servo motor speed	r/min	3000									
电动缸推力 Thrust electric cylinder	KN	6.80	10.2	7.69	10.2	6.94	12.8	4.78	9.72	6.83	13.9
电动缸承受推力 Withstanding thrust electric cylinder	KN	8									
电缸额定速度 Electric cylinder rated speed	mm/s	250		80		50		35		25	

电机连接形式 Motor connection		同步带折返式 Timing belt Turn-back type											
减速比 Reduction ratio		1		2		3		5		7		10	
丝杆导程 Screw lead	mm	5											
伺服电机功率 Servo motor power	KW	2.00	3.00	1.00	1.50	0.75	1.00	0.40	0.75	0.20	0.40	0.20	0.40
伺服电机扭矩 Servo motor torque	N.M	6.37	9.55	3.18	4.77	2.40	3.18	1.30	2.40	0.64	1.30	0.64	1.30
伺服电机转速 Servo motor speed	r/min	3000											
电动缸推力 Thrust electric cylinder	KN	6.80	10.2	6.79	10.2	7.69	10.2	6.94	12.8	4.78	9.72	6.83	13.9
电动缸承受推力 Withstanding thrust electric cylinder	KN	8											
电缸额定速度 Electric cylinder rated speed	mm/s	250		125		80		50		35		25	

电机连接形式 Motor connection		同轴直线式 Coaxial Linear									
减速比 Reduction ratio		1		3		5		7		10	
丝杆导程 Screw lead	mm	8									
伺服电机功率 Servo motor power	KW	3.00	4.00	1.00	1.50	0.40	0.75	0.40	0.75	0.20	0.40
伺服电机扭矩 Servo motor torque	N.M	9.55	12.7	3.18	4.77	1.30	2.40	1.30	2.40	0.64	1.30
伺服电机转速 Servo motor speed	r/min	3000									
电动缸推力 Thrust electric cylinder	KN	6.37	8.47	6.37	9.55	4.34	8.01	6.07	11.2	4.27	8.67
电动缸承受推力 Withstanding thrust electric cylinder	KN	8									
电缸额定速度 Electric cylinder rated speed	mm/s	400		130		80		55		40	

电机连接形式 Motor connection		同步带折返式 Timing belt Turn-back type											
减速比 Reduction ratio		1		2		3		5		7		10	
丝杆导程 Screw lead	mm	8											
伺服电机功率 Servo motor power	KW	3.00	4.00	1.50	2.00	1.00	1.50	0.40	0.75	0.40	0.75	0.20	0.40
伺服电机扭矩 Servo motor torque	N.M	9.55	12.7	4.77	6.37	3.18	4.77	1.30	2.40	1.30	2.40	0.64	1.30
伺服电机转速 Servo motor speed	r/min	3000											
电动缸推力 Thrust electric cylinder	KN	6.37	8.47	6.37	8.50	6.37	9.55	4.34	8.01	6.07	11.2	4.27	8.67
电动缸承受推力 Withstanding thrust electric cylinder	KN	8											
电缸额定速度 Electric cylinder rated speed	mm/s	400		200		130		80		55		40	

DI75/DH75 伺服电动缸选型参数表

DI75/DH75 servo electric cylinder parameter list selections

电机连接形式 Motor connection		同轴直线式 Coaxial Linear									
减速比 Reduction ratio		1		3		5		7		10	
丝杆导程 Screw lead	mm	10									
伺服电机功率 Servo motor power	KW	4.00	5.00	1.50	2.00	0.75	1.00	0.40	0.75	0.40	0.75
伺服电机扭矩 Servo motor torque	N.M	12.7	15.9	4.77	6.37	2.40	3.18	1.30	2.40	1.30	2.40
伺服电机转速 Servo motor speed	r/min	3000									
电动缸推力 Thrust electric cylinder	KN	6.78	8.49	7.64	10.2	6.41	8.49	4.86	8.97	6.94	12.8
电动缸承受推力 Withstanding thrust electric cylinder	KN	8									
电缸额定速度 Electric cylinder rated speed	mm/s	500		165		100		70		50	

电机连接形式 Motor connection		同步带折返式 Timing belt Turn-back type											
减速比 Reduction ratio		1		2		3		5		7		10	
丝杆导程 Screw lead	mm	10											
伺服电机功率 Servo motor power	KW	4.00	5.00	2.00	3.00	1.50	2.00	0.75	1.00	0.40	0.75	0.40	0.75
伺服电机扭矩 Servo motor torque	N.M	12.7	15.9	6.37	9.55	4.77	6.37	2.40	3.18	1.30	2.40	1.30	2.40
伺服电机转速 Servo motor speed	r/min	3000											
电动缸推力 Thrust electric cylinder	KN	6.78	8.49	6.80	10.2	7.64	10.2	6.41	8.49	4.86	8.97	6.94	12.8
电动缸承受推力 Withstanding thrust electric cylinder	KN	8											
电缸额定速度 Electric cylinder rated speed	mm/s	500		250		165		100		70		50	

电机连接形式 Motor connection		同轴直线式 Coaxial Linear									
减速比 Reduction ratio		1		3		5		7		10	
丝杆导程 Screw lead	mm	25									
伺服电机功率 Servo motor power	KW	4.00	5.00	3.00	4.00	2.00	3.00	1.50	2.00	1.00	1.50
伺服电机扭矩 Servo motor torque	N.M	12.7	15.9	9.55	12.7	6.37	9.55	4.77	6.37	3.18	4.77
伺服电机转速 Servo motor speed	r/min	3000									
电动缸推力 Thrust electric cylinder	KN	2.71	3.39	6.12	8.14	6.80	10.2	7.13	9.52	6.79	10.2
电动缸承受推力 Withstanding thrust electric cylinder	KN	8									
电缸额定速度 Electric cylinder rated speed	mm/s	1250		415		250		175		125	

电机连接形式 Motor connection		同步带折返式 Timing belt Turn-back type											
减速比 Reduction ratio		1		2		3		5		7		10	
丝杆导程 Screw lead	mm	25											
伺服电机功率 Servo motor power	KW	4.00	5.00	4.40	5.00	3.00	4.00	2.00	3.00	1.50	2.00	1.00	1.50
伺服电机扭矩 Servo motor torque	N.M	12.7	15.9	12.7	15.9	9.55	12.7	6.37	9.55	4.77	6.37	3.18	4.77
伺服电机转速 Servo motor speed	r/min	3000											
电动缸推力 Thrust electric cylinder	KN	2.71	3.39	5.42	6.79	6.12	8.14	6.80	10.2	7.13	9.52	6.79	10.2
电动缸承受推力 Withstanding thrust electric cylinder	KN	8											
电缸额定速度 Electric cylinder rated speed	mm/s	1250		625		415		250		175		125	

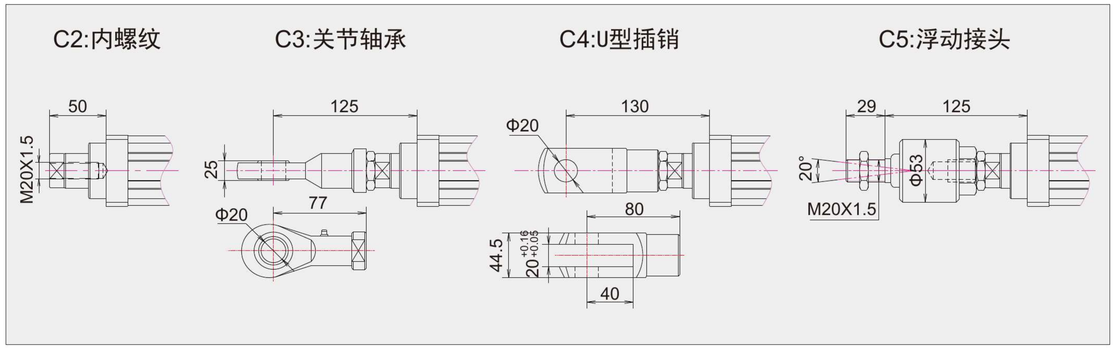

M1:前输出法兰

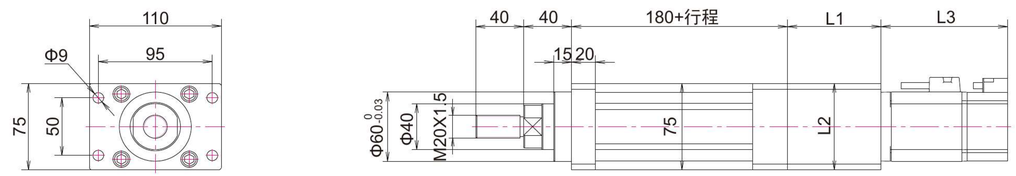

M2:卧式底座

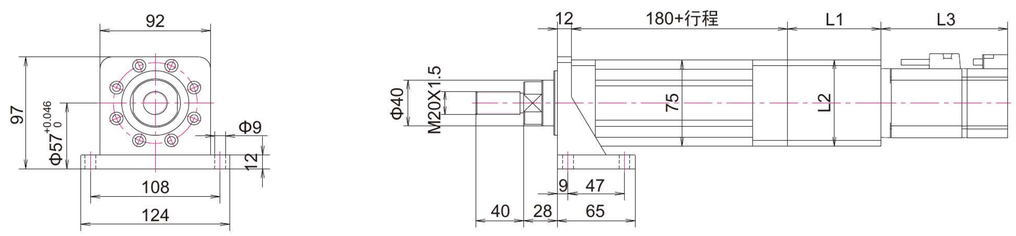

M3:前螺纹法兰

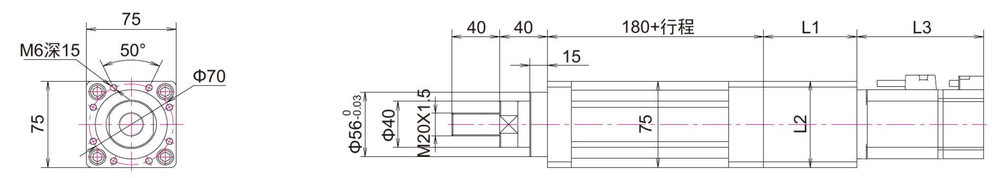

M4:后法兰耳轴

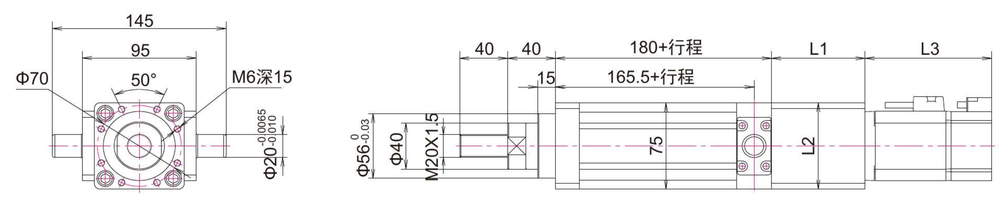

电机法兰	L1	L2	L3
80	82	80	139(请参考电机)
110	105	110	199(请参考电机)
130	110	130	192(请参考电机)

M1:前输出法兰

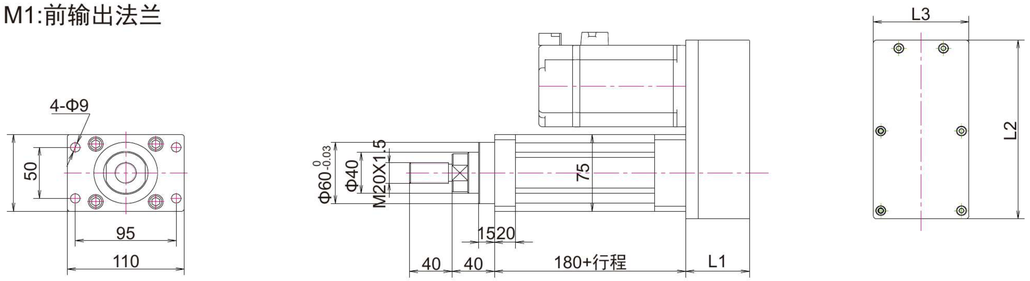

M2:卧式底座

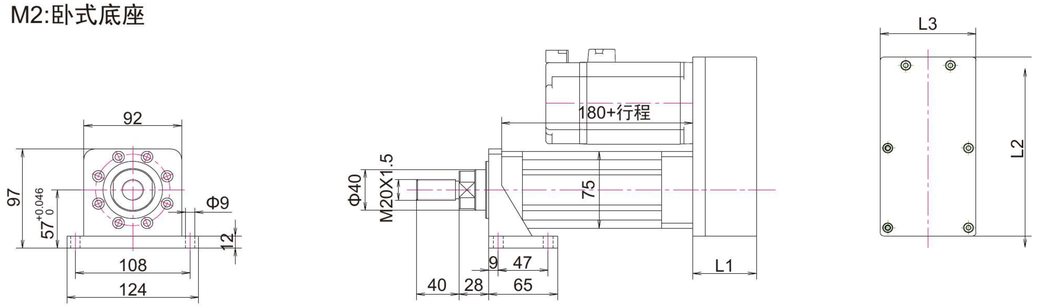

M3:尾部单耳轴

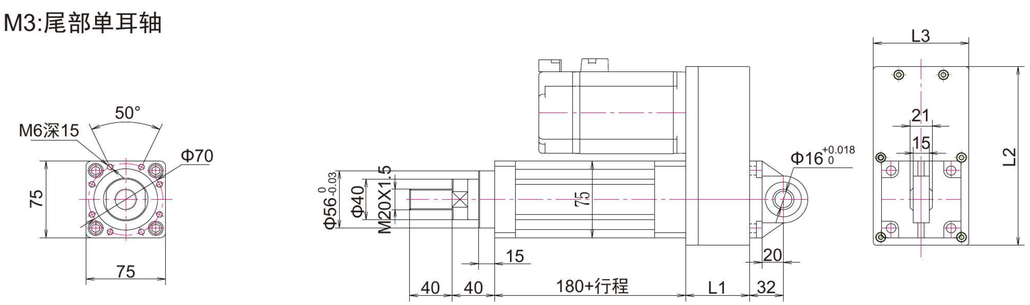

M4:后法兰耳轴

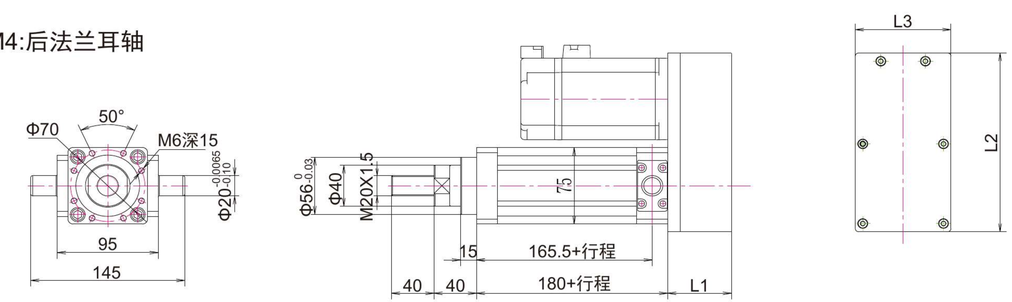

电机法兰	L1	L2	L3
80	55	177	90
110	65	205	110
130	72	278	135

DI95/DH95 伺服电动缸选型参数表

DI95/DH95 servo electric cylinder parameter list selections

电机连接形式 Motor connection		同轴直线式 Coaxial Linear														
减速比 Reduction ratio		1			3			5			7			10		
丝杆导程 Screw lead	mm	5														
伺服电机功率 Servo motor power	KW	3.00	4.00	5.00	0.75	1.00	1.50	0.40	0.75	1.00	0.20	0.40	0.75	0.20	0.40	0.75
伺服电机扭矩 Servo motor torque	N.M	9.55	12.7	15.9	2.40	3.18	4.77	1.30	2.40	3.18	0.64	1.30	2.40	0.64	1.30	2.40
伺服电机转速 Servo motor speed	r/min	3000														
电动缸推力 Thrust electric cylinder	KN	10.2	13.6	17.0	7.69	10.2	15.3	6.94	12.8	17.0	4.78	9.72	18.0	6.83	13.9	25.6
电动缸承受推力 Withstanding thrust electric cylinder	KN	15														
电缸额定速度 Electric cylinder rated speed	mm/s	250			80			50			35			25		

电机连接形式 Motor connection		同步带折返式 Timing belt Turn-back type														
减速比 Reduction ratio		1			2			5			7			10		
丝杆导程 Screw lead	mm	5														
伺服电机功率 Servo motor power	KW	3.00	4.00	5.00	1.50	2.00	3.00	0.40	0.75	1.00	0.20	0.40	0.75	0.20	0.40	0.75
伺服电机扭矩 Servo motor torque	N.M	9.55	12.7	15.9	4.77	6.37	9.55	1.30	2.40	3.18	0.64	1.30	2.40	0.64	1.30	2.40
伺服电机转速 Servo motor speed	r/min	3000														
电动缸推力 Thrust electric cylinder	KN	10.2	13.6	17.0	10.2	13.6	20.4	6.94	12.8	17.0	4.78	9.72	18.0	6.83	13.9	25.6
电动缸承受推力 Withstanding thrust electric cylinder	KN	15														
电缸额定速度 Electric cylinder rated speed	mm/s	250			125			50			35			25		

电机连接形式 Motor connection		同轴直线式 Coaxial Linear														
减速比 Reduction ratio		1			3			5			7			10		
丝杆导程 Screw lead	mm	6														
伺服电机功率 Servo motor power	KW	3.00	4.00	5.00	1.00	1.50	2.00	0.75	1.00	1.50	0.40	0.75	1.00	0.20	0.40	0.75
伺服电机扭矩 Servo motor torque	N.M	9.55	12.7	15.9	3.18	4.77	6.37	2.40	3.18	4.77	1.30	2.40	3.18	0.64	1.30	2.40
伺服电机转速 Servo motor speed	r/min	3000														
电动缸推力 Thrust electric cylinder	KN	8.50	11.3	14.2	8.49	12.7	17.0	10.7	14.2	21.2	8.10	15.0	19.8	5.69	11.6	21.4
电动缸承受推力 Withstanding thrust electric cylinder	KN	15														
电缸额定速度 Electric cylinder rated speed	mm/s	300			100			60			40			30		

电机连接形式 Motor connection		同步带折返式 Timing belt Turn-back type														
减速比 Reduction ratio		1			2			5			7			10		
丝杆导程 Screw lead	mm	6														
伺服电机功率 Servo motor power	KW	3.00	4.00	5.00	1.50	2.00	3.00	0.75	1.00	1.50	0.40	0.75	1.00	0.20	0.40	0.75
伺服电机扭矩 Servo motor torque	N.M	9.55	12.7	15.9	4.77	6.37	9.55	2.40	3.18	4.77	1.30	2.40	3.18	0.64	1.30	2.40
伺服电机转速 Servo motor speed	r/min	3000														
电动缸推力 Thrust electric cylinder	KN	8.50	11.3	14.2	8.49	11.3	17.0	10.7	14.2	21.2	8.10	15.0	19.8	5.69	11.6	21.4
电动缸承受推力 Withstanding thrust electric cylinder	KN	15														
电缸额定速度 Electric cylinder rated speed	mm/s	300			150			60			40			30		

DI95/DH95 伺服电动缸选型参数表
DI95/DH95 servo electric cylinder parameter list selections

电机连接形式 Motor connection		同轴直线式 Coaxial Linear														
减速比 Reduction ratio		1			3			5			7			10		
丝杆导程 Screw lead	mm	8														
伺服电机功率 Servo motor power	KW	3.00	4.00	5.00	1.50	2.00	3.00	0.75	1.00	1.50	0.75	1.00	1.50	0.20	0.40	0.75
伺服电机扭矩 Servo motor torque	N.M	9.55	12.7	15.9	4.77	6.37	9.55	2.40	3.18	4.77	2.40	3.18	4.77	0.64	1.30	2.40
伺服电机转速 Servo motor speed	r/min	3000														
电动缸推力 Thrust electric cylinder	KN	6.37	8.47	10.6	9.55	12.8	19.1	8.01	10.6	15.9	11.2	14.9	22.3	4.27	8.67	16.0
电动缸承受推力 Withstanding thrust electric cylinder	KN	15														
电缸额定速度 Electric cylinder rated speed	mm/s	400			130			80			55			40		

电机连接形式 Motor connection		同步带折返式 Timing belt Turn-back type														
减速比 Reduction ratio		1			2			5			7			10		
丝杆导程 Screw lead	mm	8														
伺服电机功率 Servo motor power	KW	3.00	4.00	5.00	2.00	3.00	4.00	0.75	1.00	1.50	0.75	1.00	1.50	0.20	0.40	0.75
伺服电机扭矩 Servo motor torque	N.M	9.55	12.7	15.9	6.37	9.55	12.7	2.40	3.18	4.77	2.40	3.18	4.77	0.64	1.30	2.40
伺服电机转速 Servo motor speed	r/min	3000														
电动缸推力 Thrust electric cylinder	KN	6.37	8.47	10.6	8.50	12.7	17.0	8.01	10.6	15.9	11.2	14.9	22.3	6.27	8.67	16.0
电动缸承受推力 Withstanding thrust electric cylinder	KN	15														
电缸额定速度 Electric cylinder rated speed	mm/s	400			200			80			55			40		

电机连接形式 Motor connection		同轴直线式 Coaxial Linear														
减速比 Reduction ratio		1			3			5			7			10		
丝杆导程 Screw lead	mm	10														
伺服电机功率 Servo motor power	KW	3.00	4.00	5.00	1.50	2.00	3.00	1.00	1.50	2.00	0.75	1.00	1.50	0.40	0.75	1.00
伺服电机扭矩 Servo motor torque	N.M	9.55	12.7	15.9	4.77	6.37	9.55	3.18	4.77	6.37	2.40	3.18	4.77	1.30	2.40	3.18
伺服电机转速 Servo motor speed	r/min	3000														
电动缸推力 Thrust electric cylinder	KN	5.10	6.78	8.49	7.64	10.2	15.3	8.49	12.7	17.0	9.00	11.9	17.8	6.94	12.8	17.0
电动缸承受推力 Withstanding thrust electric cylinder	KN	15														
电缸额定速度 Electric cylinder rated speed	mm/s	500			165			100			70			50		

电机连接形式 Motor connection		同步带折返式 Timing belt Turn-back type														
减速比 Reduction ratio		1			2			5			7			10		
丝杆导程 Screw lead	mm	10														
伺服电机功率 Servo motor power	KW	3.00	4.00	5.00	3.00	4.00	5..00	1.00	1.50	2.00	0.75	1.00	1.50	0.40	0.75	1.00
伺服电机扭矩 Servo motor torque	N.M	9.55	12.7	15.9	9.55	12.7	15.9	3.18	4.77	6.37	2.40	3.18	4.77	1.30	2.40	3.18
伺服电机转速 Servo motor speed	r/min	3000														
电动缸推力 Thrust electric cylinder	KN	5.10	6.78	8.49	10.2	13.6	17.0	8.49	12.7	17.0	9.00	11.9	17.8	6.94	12.8	17.0
电动缸承受推力 Withstanding thrust electric cylinder	KN	15														
电缸额定速度 Electric cylinder rated speed	mm/s	500			250			100			70			50		

DI95/DH95 伺服电动缸选型参数表
DI95/DH95 servo electric cylinder parameter list selections

电机连接形式 Motor connection		同轴直线式 Coaxial Linear														
减速比 Reduction ratio		1			3			5			7			10		
丝杆导程 Screw lead	mm	20														
伺服电机功率 Servo motor power	KW	3.00	4.00	5.00	3.00	4.00	5.00	2.00	3.00	4.00	1.50	2.00	3.00	1.00	1.50	2.00
伺服电机扭矩 Servo motor torque	N.M	9.55	12.7	15.9	9.55	12.7	15.9	6.37	9.55	12.7	4.77	6.37	9.55	3.18	4.77	6.37
伺服电机转速 Servo motor speed	r/min	3000														
电动缸推力 Thrust electric cylinder	KN	2.55	3.39	4.24	7.65	10.2	12.7	8.50	12.7	17.0	8.91	11.9	17.8	8.49	12.7	17.0
电动缸承受推力 Withstanding thrust electric cylinder	KN	15														
电缸额定速度 Electric cylinder rated speed	mm/s	1000			330			200			140			100		

电机连接形式 Motor connection		同步带折返式 Timing belt Turn-back type														
减速比 Reduction ratio		1			2			5			7			10		
丝杆导程 Screw lead	mm	20														
伺服电机功率 Servo motor power	KW	3.00	4.00	5.00	3.00	4.00	5.00	2.00	3.00	4.00	1.50	2.00	3.00	1.00	1.50	2.00
伺服电机扭矩 Servo motor torque	N.M	9.55	12.7	15.9	9.55	12.7	15.9	6.37	9.55	12.7	4.77	6.37	9.55	3.18	4.77	6.37
伺服电机转速 Servo motor speed	r/min	3000														
电动缸推力 Thrust electric cylinder	KN	2.55	3.39	4.24	5.10	6.78	8.49	8.50	12.7	17.0	8.91	11.9	17.8	8.49	12.7	17.0
电动缸承受推力 Withstanding thrust electric cylinder	KN	15														
电缸额定速度 Electric cylinder rated speed	mm/s	1000			500			200			140			100		

电机连接形式 Motor connection		同轴直线式 Coaxial Linear														
减速比 Reduction ratio		1			3			5			7			10		
丝杆导程 Screw lead	mm	32														
伺服电机功率 Servo motor power	KW	3.00	4.00	5.00	3.00	4.00	5.00	3.00	4.00	5.00	3.00	4.00	5.00	1.50	2.00	3.00
伺服电机扭矩 Servo motor torque	N.M	9.55	12.7	15.9	9.55	12.7	15.9	9.55	12.7	15.9	9.55	12.7	15.9	4.77	6.37	9.55
伺服电机转速 Servo motor speed	r/min	3000														
电动缸推力 Thrust electric cylinder	KN	1.59	2.12	2.65	4.78	6.36	7.96	7.97	10.6	13.2	11.2	14.8	18.6	7.96	10.6	15.9
电动缸承受推力 Withstanding thrust electric cylinder	KN	15														
电缸额定速度 Electric cylinder rated speed	mm/s	1600			530			320			225			160		

电机连接形式 Motor connection		同步带折返式 Timing belt Turn-back type														
减速比 Reduction ratio		1			2			5			7			10		
丝杆导程 Screw lead	mm	32														
伺服电机功率 Servo motor power	KW	3.00	4.00	5.00	3.00	4.00	5.00	3.00	4.00	5.00	3.00	4.00	5.00	1.50	2.00	3.00
伺服电机扭矩 Servo motor torque	N.M	9.55	12.7	15.9	9.55	12.7	15.9	9.55	12.7	15.9	9.55	12.7	15.9	4.77	6.37	9.55
伺服电机转速 Servo motor speed	r/min	3000														
电动缸推力 Thrust electric cylinder	KN	1.59	2.12	2.65	3.19	4.24	5.30	7.97	10.6	13.2	11.2	14.8	18.6	7.96	10.6	15.9
电动缸承受推力 Withstanding thrust electric cylinder	KN	15														
电缸额定速度 Electric cylinder rated speed	mm/s	1600			800			320			225			160		

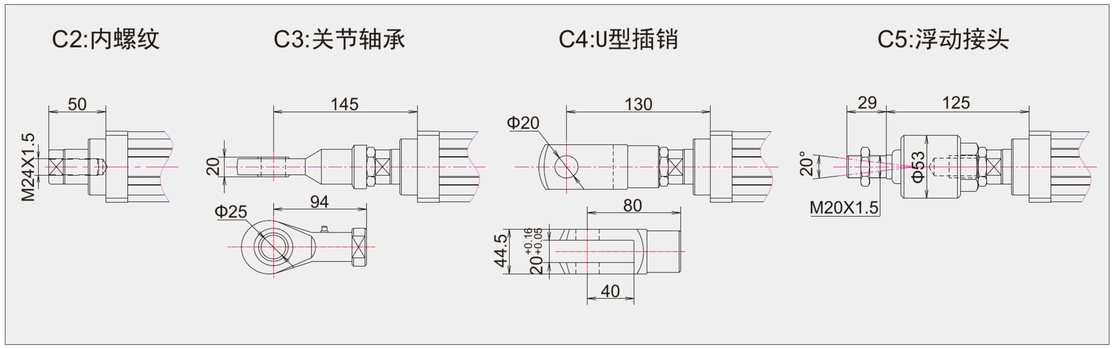

M1:前输出法兰

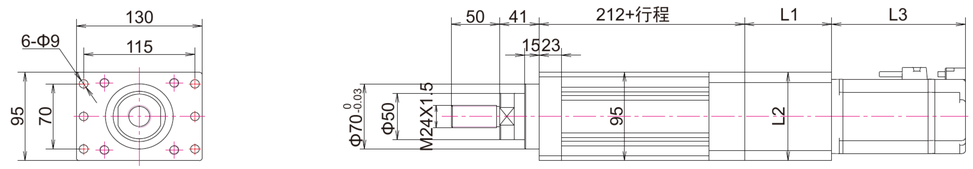

M2:卧式底座

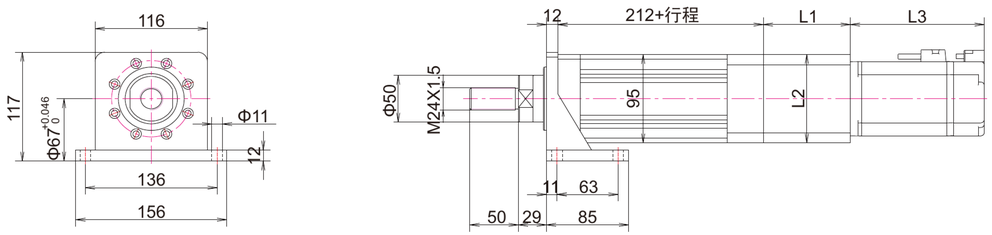

M3:前螺纹法兰

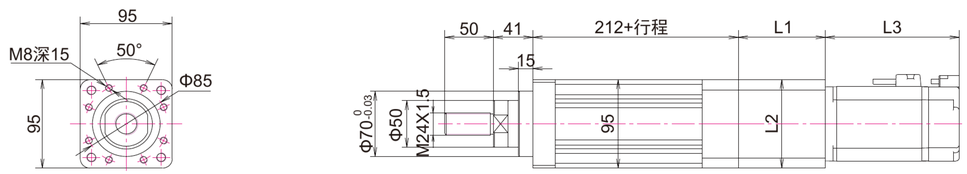

M4:后法兰耳轴

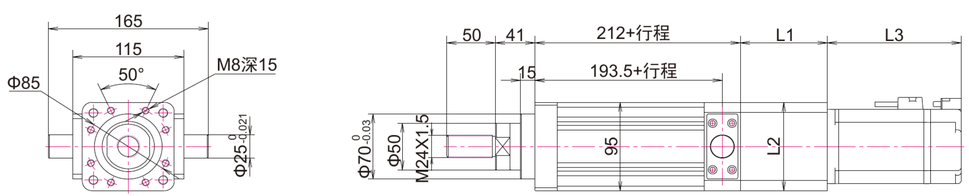

电机法兰	L1	L2	L3
110	85	110	199(请参考电机)
130	105	130	190(请参考电机)
150	115	150	220(请参考电机)

M1:前输出法兰

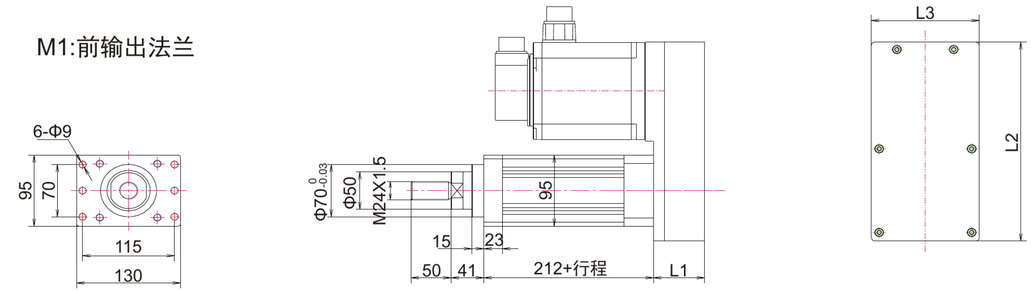

M2:卧式底座

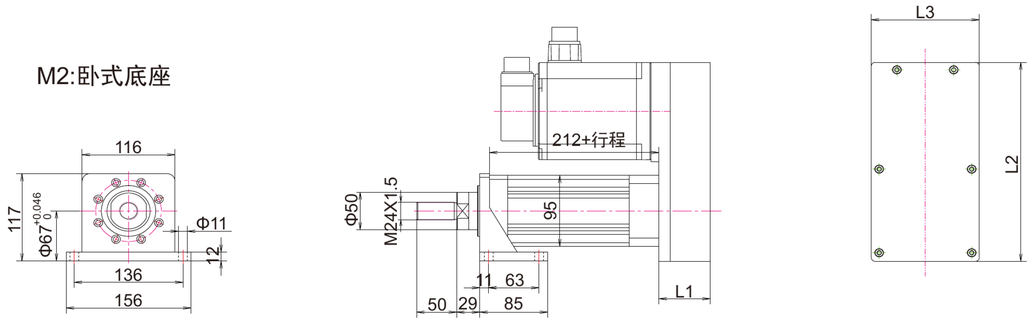

M3:尾部单耳轴

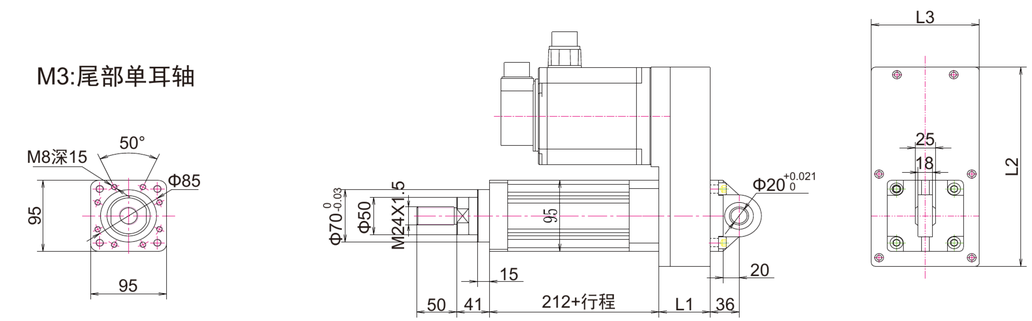

M4:后法兰耳轴

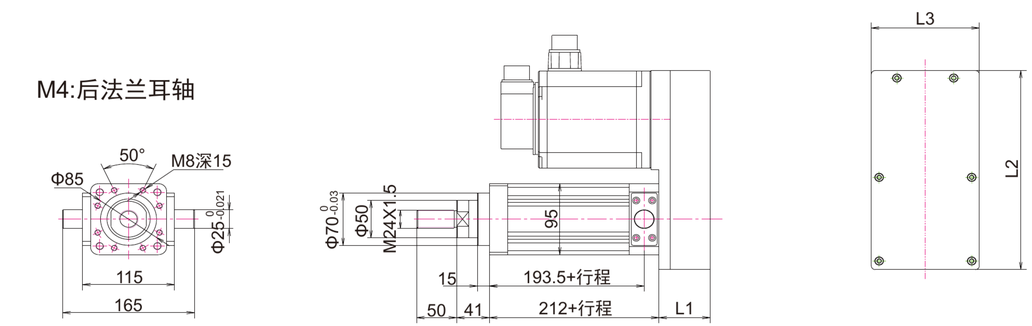

电机法兰	L1	L2	L3
110	75	205	110
130	75	278	135
150	75	290	154

DI/DH 95

PERFORMANCE PARAMETERS

DI110/DH110 伺服电动缸选型参数表
DI110/DH110 servo electric cylinder parameter list selections

电机连接形式 Motor connection		同轴直线式 Coaxial Linear														
减速比 Reduction ratio		1			3			5			7			10		
丝杆导程 Screw lead	mm	5														
伺服电机功率 Servo motor power	KW	1.00	2.00	3.00	1.50	2.00	3.00	1.00	1.50	2.00	0.75	1.00	1.50	0.40	0.75	1.00
伺服电机扭矩 Servo motor torque	N.M	6.37	12.7	19.1	4.77	6.37	9.55	3.18	4.77	6.37	2.40	3.18	4.77	1.30	2.40	3.18
伺服电机转速 Servo motor speed	r/min	1500			3000											
电动缸推力 Thrust electric cylinder	KN	6.80	13.5	20.0	15.3	20.4	30.6	17.0	25.5	34.0	18.0	23.8	35.7	13.9	25.6	34.0
电动缸承受推力 Withstanding thrust electric cylinder	KN	30														
电缸额定速度 Electric cylinder rated speed	mm/s	125			80			50			35			25		

电机连接形式 Motor connection		同步带折返式 Timing belt Turn-back type														
减速比 Reduction ratio		1			2			5			7			10		
丝杆导程 Screw lead	mm	5														
伺服电机功率 Servo motor power	KW	1.00	2.00	3.00	3.00	4.00	5.00	1.00	1.50	2.00	0.75	1.00	1.50	0.40	0.75	1.00
伺服电机扭矩 Servo motor torque	N.M	6.37	12.7	19.1	9.55	12.7	15.9	3.18	4.77	6.37	2.40	3.18	4.77	1.30	2.40	3.18
伺服电机转速 Servo motor speed	r/min	1500			3000											
电动缸推力 Thrust electric cylinder	KN	6.80	13.5	20.0	20.4	27.1	34.0	17.0	25.5	34.0	18.0	23.8	35.7	13.9	25.6	34.0
电动缸承受推力 Withstanding thrust electric cylinder	KN	30														
电缸额定速度 Electric cylinder rated speed	mm/s	125			125			50			35			25		

电机连接形式 Motor connection		同轴直线式 Coaxial Linear														
减速比 Reduction ratio		1			3			5			7			10		
丝杆导程 Screw lead	mm	6														
伺服电机功率 Servo motor power	KW	2.00	3.00	4.50	2.00	3.00	4.00	1.50	2.00	3.00	1.00	1.50	2.00	0.75	1.00	1.50
伺服电机扭矩 Servo motor torque	N.M	12.8	19.2	28.8	6.37	9.55	12.7	4.77	6.37	9.55	3.18	4.77	6.37	2.40	3.18	4.77
伺服电机转速 Servo motor speed	r/min	1500			3000											
电动缸推力 Thrust electric cylinder	KN	11.4	17.1	25.6	17.0	25.5	33.9	21.2	28.3	42.5	19.8	29.7	39.7	21.4	28.3	42.4
电动缸承受推力 Withstanding thrust electric cylinder	KN	30														
电缸额定速度 Electric cylinder rated speed	mm/s	150			100			60			40			30		

电机连接形式 Motor connection		同步带折返式 Timing belt Turn-back type														
减速比 Reduction ratio		1			2			5			7			10		
丝杆导程 Screw lead	mm	6														
伺服电机功率 Servo motor power	KW	2.00	3.00	4.50	2.00	3.00	4.00	1.50	2.00	3.00	1.00	1.50	2.00	0.75	1.00	1.50
伺服电机扭矩 Servo motor torque	N.M	12.8	19.2	28.8	9.55	14.3	19.1	4.77	6.37	9.55	3.18	4.77	6.37	2.40	3.18	4.77
伺服电机转速 Servo motor speed	r/min	1500			2000			3000								
电动缸推力 Thrust electric cylinder	KN	11.4	17.1	25.6	17.0	25.4	34.0	21.2	28.3	42.5	19.8	29.7	39.7	21.4	28.3	42.4
电动缸承受推力 Withstanding thrust electric cylinder	KN	30														
电缸额定速度 Electric cylinder rated speed	mm/s	150			100			60			40			30		

DI110/DH110 伺服电动缸选型参数表
DI110/DH110 servo electric cylinder parameter list selections

电机连接形式 Motor connection		同轴直线式 Coaxial Linear														
减速比 Reduction ratio		1			3			5			7			10		
丝杆导程 Screw lead	mm	8														
伺服电机功率 Servo motor power	KW	3.00	4.50	6.00	3.00	4.00	5.00	1.50	2.00	3.00	1.50	2.00	3.00	0.75	1.00	1.50
伺服电机扭矩 Servo motor torque	N.M	19.1	28.7	38.2	9.55	12.7	15.9	4.77	6.37	9.55	4.77	6.37	9.55	2.40	3.18	4.77
伺服电机转速 Servo motor speed	r/min	1500			3000											
电动缸推力 Thrust electric cylinder	KN	12.8	19.2	25.5	19.1	25.4	31.8	15.9	21.3	31.9	22.3	29.8	44.6	16.0	21.2	31.8
电动缸承受推力 Withstanding thrust electric cylinder	KN	30														
电缸额定速度 Electric cylinder rated speed	mm/s	200			130			80			55			40		

电机连接形式 Motor connection		同步带折返式 Timing belt Turn-back type														
减速比 Reduction ratio		1			2			5			7			10		
丝杆导程 Screw lead	mm	8														
伺服电机功率 Servo motor power	KW	3.00	4.50	6.00	3.00	4.00	5.00	1.50	2.00	3.00	1.50	2.00	3.00	0.75	1.00	1.50
伺服电机扭矩 Servo motor torque	N.M	19.1	28.7	38.2	14.3	19.1	23.9	4.77	6.37	9.55	4.77	6.37	9.55	2.40	3.18	4.77
伺服电机转速 Servo motor speed	r/min	1500			2000			3000								
电动缸推力 Thrust electric cylinder	KN	12.8	19.2	25.5	19.1	25.5	31.9	15.9	21.3	31.9	22.3	29.8	44.6	16.0	21.2	31.8
电动缸承受推力 Withstanding thrust electric cylinder	KN	30														
电缸额定速度 Electric cylinder rated speed	mm/s	200			130			80			55			40		

电机连接形式 Motor connection		同轴直线式 Coaxial Linear														
减速比 Reduction ratio		1			3			5			7			10		
丝杆导程 Screw lead	mm	10														
伺服电机功率 Servo motor power	KW	3.00	4.50	6.00	2.00	3.00	4.00	2.00	3.00	4.00	1.50	2.00	3.00	1.00	1.50	2.00
伺服电机扭矩 Servo motor torque	N.M	19.1	28.7	38.2	9.55	14.3	19.1	6.37	9.55	12.7	4.77	6.37	9.55	3.18	4.77	6.37
伺服电机转速 Servo motor speed	r/min	1500			2000			3000								
电动缸推力 Thrust electric cylinder	KN	10.2	15.3	20.5	15.3	22.9	30.6	17.0	25.5	33.9	17.8	23.8	35.7	17.0	25.5	34.0
电动缸承受推力 Withstanding thrust electric cylinder	KN	30														
电缸额定速度 Electric cylinder rated speed	mm/s	250			110			100			70			50		

电机连接形式 Motor connection		同步带折返式 Timing belt Turn-back type														
减速比 Reduction ratio		1			2			5			7			10		
丝杆导程 Screw lead	mm	10														
伺服电机功率 Servo motor power	KW	3.00	4.50	6.00	1.00	2.00	3.00	2.00	3.00	4.00	1.50	2.00	3.00	1.00	1.50	2.00
伺服电机扭矩 Servo motor torque	N.M	19.1	28.7	38.2	6.37	12.8	19.1	6.37	9.55	12.7	4.77	6.37	9.55	3.18	4.77	6.37
伺服电机转速 Servo motor speed	r/min	1500						3000								
电动缸推力 Thrust electric cylinder	KN	10.2	15.3	20.5	6.80	13.6	20.4	17.0	25.5	33.9	17.8	23.8	35.7	17.0	25.5	34.0
电动缸承受推力 Withstanding thrust electric cylinder	KN	30														
电缸额定速度 Electric cylinder rated speed	mm/s	250			125			100			70			50		

DI110/DH110 伺服电动缸选型参数表

DI110/DH110 servo electric cylinder parameter list selections

电机连接形式 Motor connection		同轴直线式 Coaxial Linear														
减速比 Reduction ratio		1			3			5			7			10		
丝杆导程 Screw lead	mm	20														
伺服电机功率 Servo motor power	KW	3.00	4.50	6.00	2.00	3.00	4.50	3.00	4.00	5.00	3.00	4.00	5.00	2.00	3.00	4.00
伺服电机扭矩 Servo motor torque	N.M	19.1	28.7	38.3	12.7	19.1	28.7	14.3	19.1	23.9	9.55	12.7	15.9	6.37	9.55	12.7
伺服电机转速 Servo motor speed	r/min	1500						2000			3000					
电动缸推力 Thrust electric cylinder	KN	5.10	7.65	10.3	10.3	15.5	23.0	19.1	25.5	31.9	17.8	23.7	35.7	17.0	25.5	33.9
电动缸承受推力 Withstanding thrust electric cylinder	KN	30														
电缸额定速度 Electric cylinder rated speed	mm/s	500			165			130			140			100		

电机连接形式 Motor connection		同步带折返式 Timing belt Turn-back type														
减速比 Reduction ratio		1			2			5			7			10		
丝杆导程 Screw lead	mm	20														
伺服电机功率 Servo motor power	KW	3.00	4.50	6.00	3.00	4.50	6.00	3.00	4.00	5.00	3.00	4.00	5.00	2.00	3.00	4.00
伺服电机扭矩 Servo motor torque	N.M	19.1	28.7	38.3	38.3	28.7	38.3	14.3	19.1	23.9	9.55	12.7	15.9	6.37	9.55	12.7
伺服电机转速 Servo motor speed	r/min	1500						2000			3000					
电动缸推力 Thrust electric cylinder	KN	7.66	7.65	10.3	10.2	15.3	20.6	19.4	25.5	31.9	17.8	23.7	35.7	17.0	25.5	33.9
电动缸承受推力 Withstanding thrust electric cylinder	KN	30														
电缸额定速度 Electric cylinder rated speed	mm/s	500			250			130			140			100		

电机连接形式 Motor connection		同轴直线式 Coaxial Linear														
减速比 Reduction ratio		1			3			5			7			10		
丝杆导程 Screw lead	mm	40														
伺服电机功率 Servo motor power	KW	3.00	4.50	6.00	3.00	4.50	6.00	3.00	4.50	6.00	2.00	3.00	4.50	3.00	4.00	5.00
伺服电机扭矩 Servo motor torque	N.M	28.7	28.7	38.2	19.1	28.7	38.3	19.1	28.7	38.3	12.8	19.1	28.7	14.3	19.1	23.9
伺服电机转速 Servo motor speed	r/min	1500												2000		
电动缸推力 Thrust electric cylinder	KN	2.55	3.82	5.1	7.65	11.5	15.3	12.7	19.1	25.5	12.0	17.8	26.7	19.1	25.5	31.9
电动缸承受推力 Withstanding thrust electric cylinder	KN	30														
电缸额定速度 Electric cylinder rated speed	mm/s	1000			333			200			140			130		

电机连接形式 Motor connection		同步带折返式 Timing belt Turn-back type														
减速比 Reduction ratio		1			2			5			7			10		
丝杆导程 Screw lead	mm	40														
伺服电机功率 Servo motor power	KW	3.00	4.50	6.00	3.00	4.50	6.00	3.00	4.50	6.00	2.00	3.00	4.50	3.00	4.00	5.00
伺服电机扭矩 Servo motor torque	N.M	19.1	28.7	38.2	19.1	28.7	38.3	19.1	28.7	38.3	12.8	19.1	28.7	14.3	19.1	23.9
伺服电机转速 Servo motor speed	r/min	1500												2000		
电动缸推力 Thrust electric cylinder	KN	2.55	3.82	5.1	5.10	7.64	10.2	12.8	19.1	25.5	12.0	17.8	26.7	19.1	25.5	31.9
电动缸承受推力 Withstanding thrust electric cylinder	KN	30														
电缸额定速度 Electric cylinder rated speed	mm/s	1000			500			200			140			130		

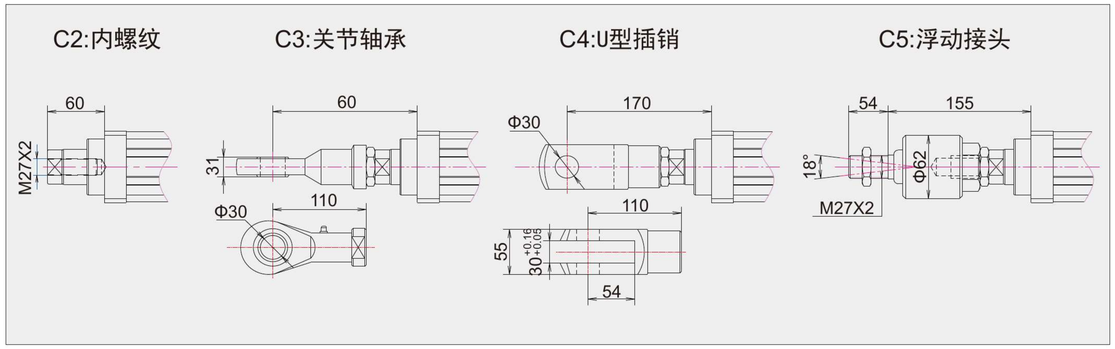

M1:前输出法兰

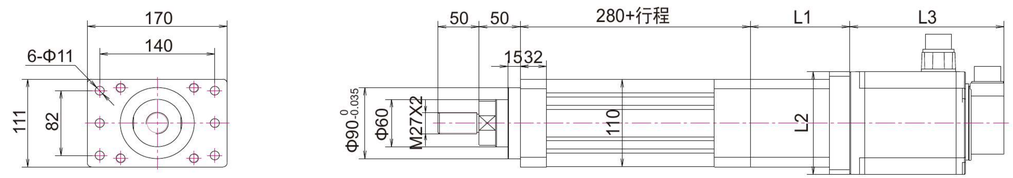

M2:卧式底座

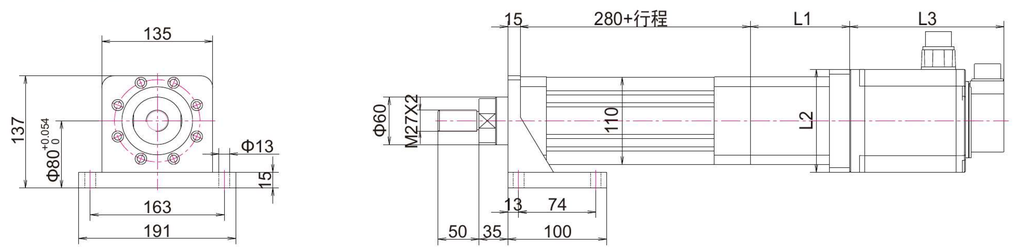

M3:前螺纹法兰

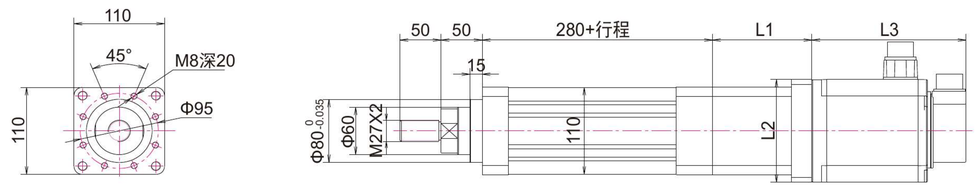

M4:后法兰耳轴

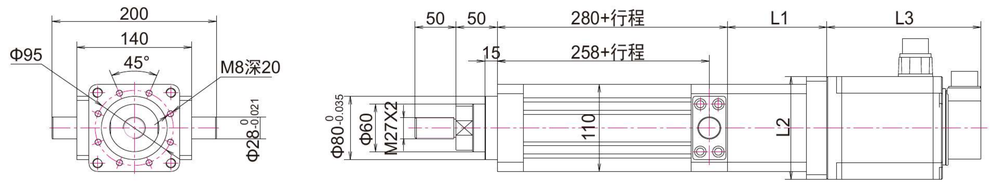

电机法兰	L1	L2	L3
130	118	130	190(请参考电机)
150	118	150	220(请参考电机)
180	138	180	202(请参考电机)

M1:前输出法兰

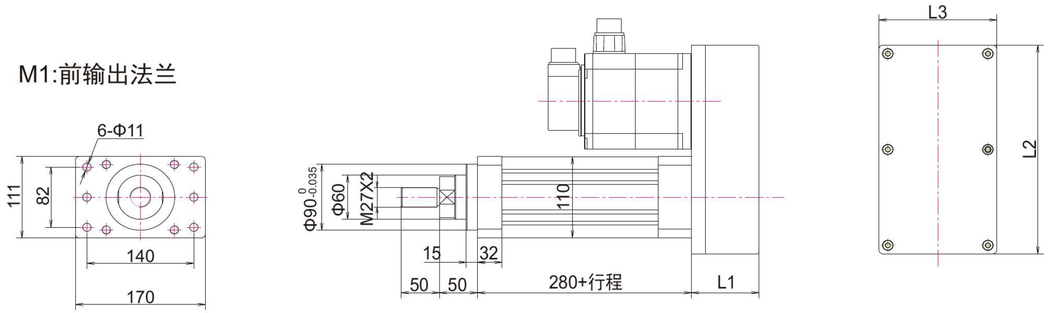

M2:卧式底座

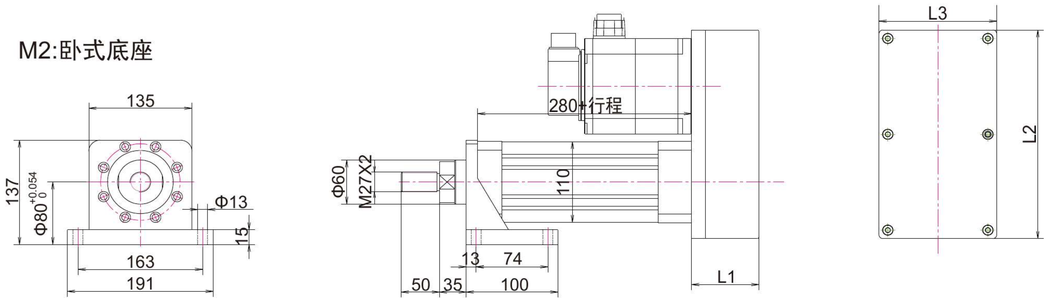

M3:尾部单耳轴

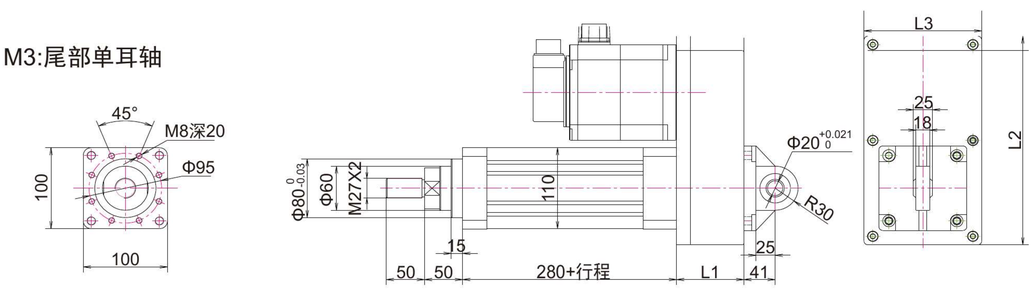

M4:后法兰耳轴

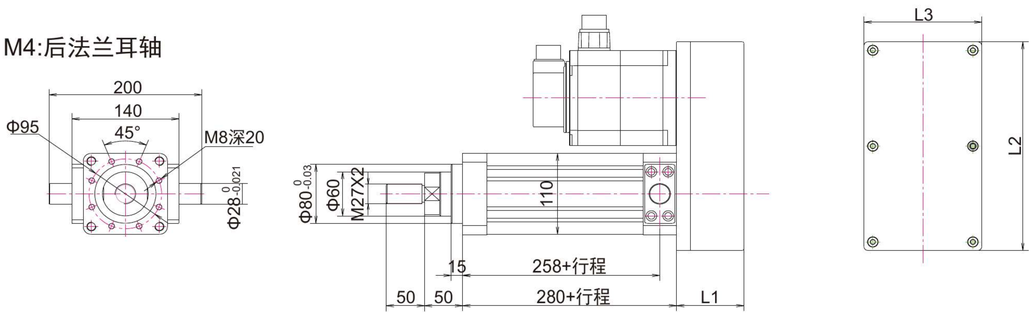

电机法兰	L1	L2	L3
130	78	278	135
150	78	290	154
180	93	361	180

DI145/DH145 伺服电动缸选型参数表

DI145/DH145 servo electric cylinder parameter list selections

电机连接形式 Motor connection		同轴直线式 Coaxial Linear														
减速比 Reduction ratio		1			3			5			7			10		
丝杆导程 Screw lead	mm	10														
伺服电机功率 Servo motor power	KW	3.00	4.50	6.00	3.00	4.50	6.00	2.00	3.00	4.50	1.00	2.00	3.00	2.00	3.00	4.00
伺服电机扭矩 Servo motor torque	N.M	19.1	28.7	38.3	19.1	28.6	38.2	12.7	19.1	28.6	6.37	12.7	19.1	9.55	14.3	19.1
伺服电机转速 Servo motor speed	r/min	1500												2000		
电动缸推力 Thrust electric cylinder	KN	10.2	15.3	20.4	30.6	45.9	61.2	34.0	51.0	76.5	23.8	47.5	72.5	51.0	76.3	102
电动缸承受推力 Withstanding thrust electric cylinder	KN	100														
电缸额定速度 Electric cylinder rated speed	mm/s	250			80			50			35			30		

电机连接形式 Motor connection		同步带折返式 Timing belt Turn-back type														
减速比 Reduction ratio		1			2			5			7			10		
丝杆导程 Screw lead	mm	10														
伺服电机功率 Servo motor power	KW	3.00	4.50	6.00	3.00	4.50	6.00	2.00	3.00	4.50	1.00	2.00	3.00	2.00	3.00	4.00
伺服电机扭矩 Servo motor torque	N.M	19.1	28.7	38.3	19.1	28.6	38.2	12.7	19.1	28.6	6.37	12.7	19.1	9.55	14.3	19.1
伺服电机转速 Servo motor speed	r/min	1500												2000		
电动缸推力 Thrust electric cylinder	KN	10.2	15.3	20.4	20.4	30.6	40.8	34.0	51.0	76.5	23.8	47.5	72.5	51.0	76.3	102
电动缸承受推力 Withstanding thrust electric cylinder	KN	100														
电缸额定速度 Electric cylinder rated speed	mm/s	250			125			50			35			30		

电机连接形式 Motor connection		同轴直线式 Coaxial Linear														
减速比 Reduction ratio		1			3			5			7			10		
丝杆导程 Screw lead	mm	16														
伺服电机功率 Servo motor power	KW	3.00	4.50	6.00	3.00	4.50	6.00	3.00	4.50	6.00	2.00	3.00	4.50	2.00	3.00	4.50
伺服电机扭矩 Servo motor torque	N.M	19.1	28.7	38.2	19.1	28.6	38.2	19.1	28.6	38.2	12.8	19.1	28.6	12.8	19.1	28.6
伺服电机转速 Servo motor speed	r/min	1500														
电动缸推力 Thrust electric cylinder	KN	6.37	9.50	12.8	19.1	28.5	38.4	31.8	47.5	64.0	30.0	44.6	66.5	42.7	63.6	95.0
电动缸承受推力 Withstanding thrust electric cylinder	KN	100														
电缸额定速度 Electric cylinder rated speed	mm/s	400			133			80			57			40		

电机连接形式 Motor connection		同步带折返式 Timing belt Turn-back type														
减速比 Reduction ratio		1			2			5			7			10		
丝杆导程 Screw lead	mm	16														
伺服电机功率 Servo motor power	KW	3.00	4.50	6.00	3.00	4.50	6.00	3.00	4.50	6.00	2.00	3.00	4.50	2.00	3.00	4.50
伺服电机扭矩 Servo motor torque	N.M	19.1	28.7	38.2	19.1	28.6	38.2	19.1	28.6	38.2	12.8	19.1	28.6	12.8	19.1	28.6
伺服电机转速 Servo motor speed	r/min	1500														
电动缸推力 Thrust electric cylinder	KN	6.37	9.50	12.8	12.8	19.0	25.6	31.8	47.5	64.0	30.0	44.6	66.5	42.7	63.6	95.0
电动缸承受推力 Withstanding thrust electric cylinder	KN	100														
电缸额定速度 Electric cylinder rated speed	mm/s	400			200			80			57			40		

DI145/DH145 伺服电动缸选型参数表

DI145/DH145 servo electric cylinder parameter list selections

电机连接形式 Motor connection		同轴直线式 Coaxial Linear														
减速比 Reduction ratio		1			3			5			7			10		
丝杆导程 Screw lead	mm	20														
伺服电机功率 Servo motor power	KW	3.00	4.50	6.00	3.00	4.50	6.00	3.00	4.50	6.00	3.00	4.50	6.00	2.00	3.00	4.50
伺服电机扭矩 Servo motor torque	N.M	19.1	28.6	38.2	19.1	28.6	38.2	19.1	28.6	38.2	19.1	28.2	38.2	12.8	19.1	28.2
伺服电机转速 Servo motor speed	r/min	1500														
电动缸推力 Thrust electric cylinder	KN	5.10	7.65	10.2	15.3	22.9	30.6	25.5	38.2	51.0	35.7	53.5	71.4	34.2	51.3	75.0
电动缸承受推力 Withstanding thrust electric cylinder	KN	100														
电缸额定速度 Electric cylinder rated speed	mm/s	500			165			100			70			50		

电机连接形式 Motor connection		同步带折返式 Timing belt Turn-back type														
减速比 Reduction ratio		1			2			5			7			10		
丝杆导程 Screw lead	mm	20														
伺服电机功率 Servo motor power	KW	3.00	4.50	6.00	3.00	4.50	6.00	3.00	4.50	6.00	3.00	4.50	6.00	2.00	3.00	4.50
伺服电机扭矩 Servo motor torque	N.M	19.1	28.6	38.2	19.1	28.6	38.2	19.1	28.6	38.2	19.1	28.2	38.2	12.8	19.1	28.2
伺服电机转速 Servo motor speed	r/min	1500														
电动缸推力 Thrust electric cylinder	KN	5.10	7.65	10.2	10.2	15.3	20.2	25.5	38.2	51.0	35.7	53.5	71.4	34.2	51.3	75.0
电动缸承受推力 Withstanding thrust electric cylinder	KN	100														
电缸额定速度 Electric cylinder rated speed	mm/s	500			250			100			70			50		

电机连接形式 Motor connection		同轴直线式 Coaxial Linear														
减速比 Reduction ratio		1			3			5			7			10		
丝杆导程 Screw lead	mm	40														
伺服电机功率 Servo motor power	KW	3.00	4.50	6.00	3.00	4.50	6.00	3.00	4.50	6.00	3.00	4.50	6.00	3.00	4.50	6.00
伺服电机扭矩 Servo motor torque	N.M	19.1	28.6	38.2	19.1	28.6	38.2	19.1	28.6	38.2	19.1	28.2	38.2	19.1	28.2	38.2
伺服电机转速 Servo motor speed	r/min	1500														
电动缸推力 Thrust electric cylinder	KN	2.55	3.85	5.10	7.65	11.5	15.3	12.7	19.1	38.2	17.8	26.4	35.5	25.5	38.5	51.0
电动缸承受推力 Withstanding thrust electric cylinder	KN	100														
电缸额定速度 Electric cylinder rated speed	mm/s	1000			333			200			140			100		

电机连接形式 Motor connection		同步带折返式 Timing belt Turn-back type														
减速比 Reduction ratio		1			2			5			7			10		
丝杆导程 Screw lead	mm	40														
伺服电机功率 Servo motor power	KW	3.00	4.50	6.00	3.00	4.50	6.00	3.00	4.50	6.00	3.00	4.50	6.00	3.00	4.50	6.00
伺服电机扭矩 Servo motor torque	N.M	19.1	28.6	38.2	19.1	28.6	38.2	19.1	28.6	38.2	19.1	28.2	38.2	19.1	28.2	38.2
伺服电机转速 Servo motor speed	r/min	1500														
电动缸推力 Thrust electric cylinder	KN	2.55	3.85	5.10	1.65	11.5	10.2	12.7	19.1	38.2	17.8	26.4	35.5	25.5	38.5	51.0
电动缸承受推力 Withstanding thrust electric cylinder	KN	100														
电缸额定速度 Electric cylinder rated speed	mm/s	1000			500			200			140			100		

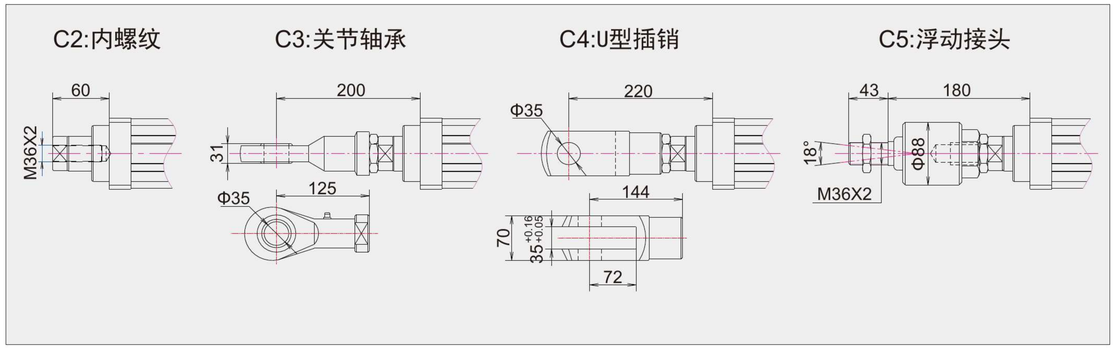

M1:前输出法兰

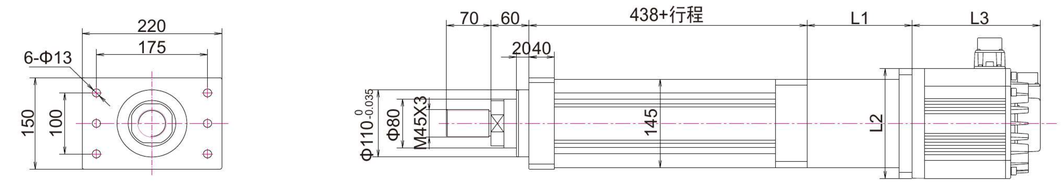

M2:卧式底座

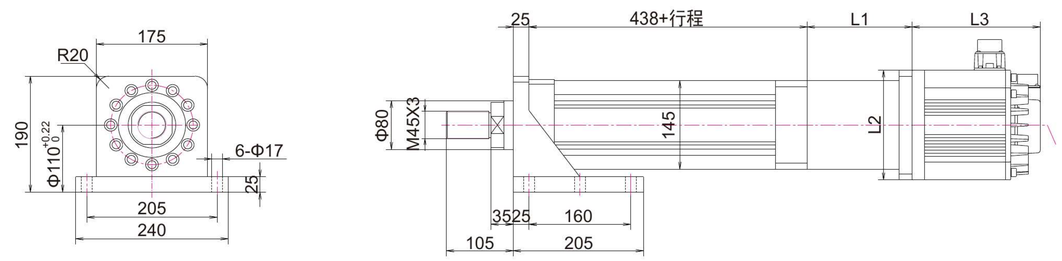

M3:前螺纹法兰

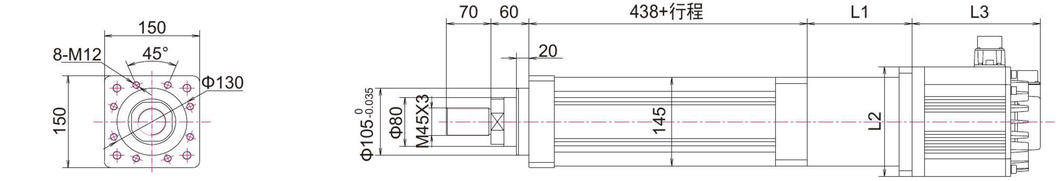

M4:后法兰耳轴

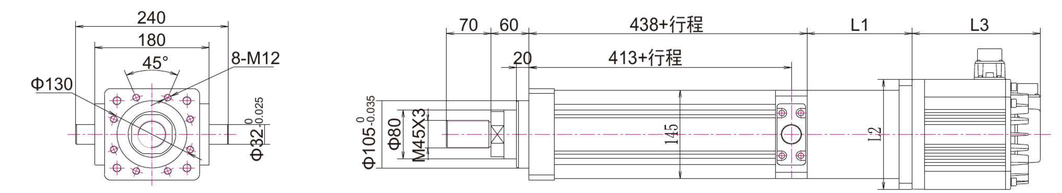

电机法兰	L1	L2	L3
150	145	150	220(请参考电机)
180	165	180	202(请参考电机)
190	165	190	220(请参考电机)

M1:前输出法兰

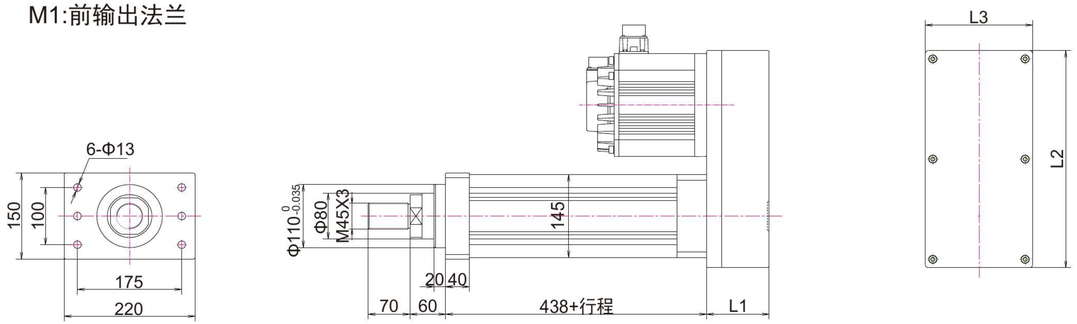

M2:卧式底座

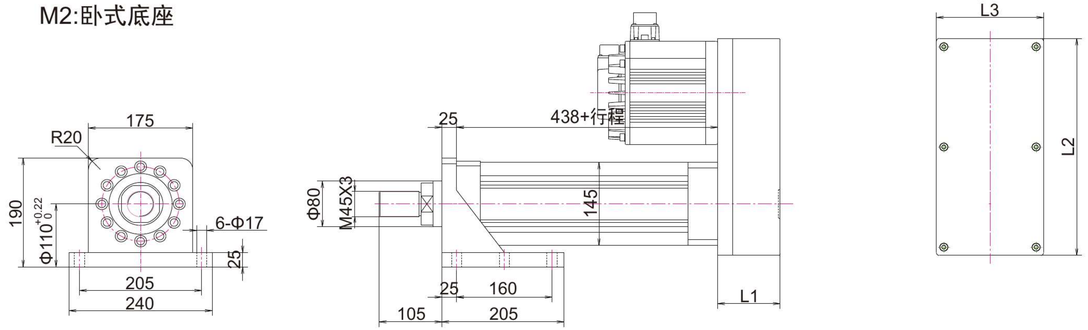

M3:尾部单耳轴

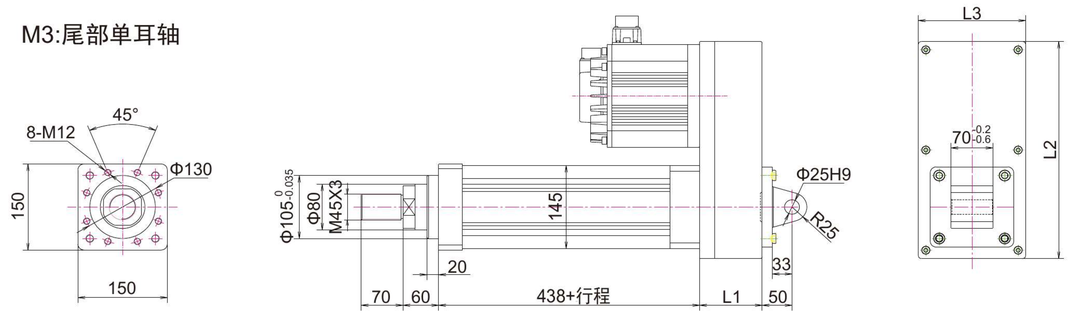

M4:后法兰耳轴

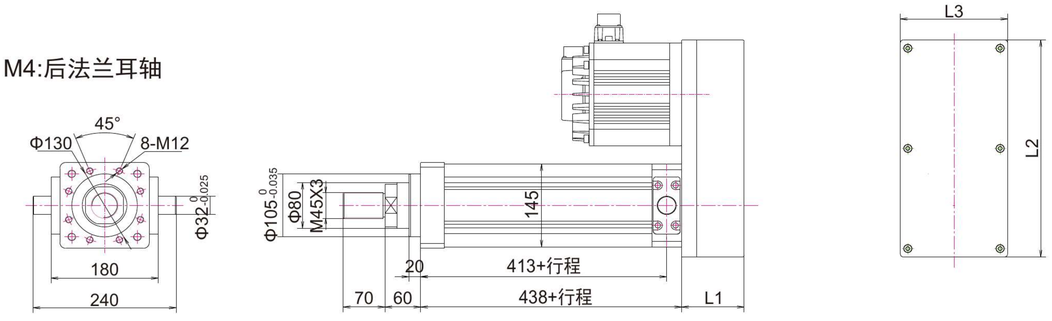

电机法兰	L1	L2	L3
150	85	290	154
180	100	361	180
190	105	380	190

DI190/DH190 伺服电动缸选型参数表

DI190/DH190 servo electric cylinder parameter list selections

电机连接形式 Motor connection		同轴直线式 Coaxial Linear														
减速比 Reduction ratio		1			3			5			7			10		
丝杆导程 Screw lead	mm	10														
伺服电机功率 Servo motor power	KW	7.50	11.0	15.0	7.50	11.0	15.0	3.00	4.50	6.00	2.00	3.00	4.50	0.90	2.00	3.00
伺服电机扭矩 Servo motor torque	N.M	47.8	70.0	95.5	47.8	70.0	95.5	28.7	43.0	57.3	19.1	28.7	43.0	8.59	19.1	28.7
伺服电机转速 Servo motor speed	r/min	1500						1000								
电动缸推力 Thrust electric cylinder	KN	25.5	37.4	51.0	76.6	112	153	76.6	115	153	71.4	107	161	45.9	102	153
电动缸承受推力 Withstanding thrust electric cylinder	KN	150														
电缸额定速度 Electric cylinder rated speed	mm/s	250			80			30			20			15		

电机连接形式 Motor connection		同步带折返式 Timing belt Turn-back type														
减速比 Reduction ratio		1			2			5			7			10		
丝杆导程 Screw lead	mm	10														
伺服电机功率 Servo motor power	KW	7.50	11.0	15.0	7.50	11.0	15.0	3.00	4.50	6.00	2.00	3.00	4.50	0.90	2.00	3.00
伺服电机扭矩 Servo motor torque	N.M	47.8	70.0	95.5	47.8	70.0	95.5	28.7	43.0	57.3	19.1	28.7	43.0	8.59	19.1	28.7
伺服电机转速 Servo motor speed	r/min	1500						1000								
电动缸推力 Thrust electric cylinder	KN	25.5	37.4	51.0	51.0	74.7	102	76.6	115	153	71.4	107	161	45.9	102	153
电动缸承受推力 Withstanding thrust electric cylinder	KN	150														
电缸额定速度 Electric cylinder rated speed	mm/s	250			125			30			20			15		

电机连接形式 Motor connection		同轴直线式 Coaxial Linear														
减速比 Reduction ratio		1			3			5			7			10		
丝杆导程 Screw lead	mm	16														
伺服电机功率 Servo motor power	KW	7.50	11.0	15.0	7.50	11.0	15.0	7.50	11.0	15.0	3.00	4.50	6.00	3.00	4.50	6.00
伺服电机扭矩 Servo motor torque	N.M	47.8	70.0	95.5	47.8	70.0	95.5	47.8	70.0	95.5	28.7	43.0	57.3	28.7	43.0	57.3
伺服电机转速 Servo motor speed	r/min	1500									1000					
电动缸推力 Thrust electric cylinder	KN	16.0	23.4	31.9	47.8	70.0	95.6	79.7	117	159	67.0	100	134	95.8	144	191
电动缸承受推力 Withstanding thrust electric cylinder	KN	150														
电缸额定速度 Electric cylinder rated speed	mm/s	400			130			80			35			25		

电机连接形式 Motor connection		同步带折返式 Timing belt Turn-back type														
减速比 Reduction ratio		1			2			5			7			10		
丝杆导程 Screw lead	mm	16														
伺服电机功率 Servo motor power	KW	7.50	11.0	15.0	7.50	11.0	15.0	7.50	11.0	15.0	3.00	4.50	6.00	3.00	4.50	6.00
伺服电机扭矩 Servo motor torque	N.M	47.8	70.0	95.5	47.8	70.0	95.5	47.8	70.0	95.5	28.7	43.0	57.3	28.7	43.0	57.3
伺服电机转速 Servo motor speed	r/min	1500									1000					
电动缸推力 Thrust electric cylinder	KN	16.0	23.4	31.9	31.9	46.7	159	79.7	117	159	67.0	100	134	95.8	144	191
电动缸承受推力 Withstanding thrust electric cylinder	KN	150														
电缸额定速度 Electric cylinder rated speed	mm/s	400			200			80			35			25		

DI190/DH190 伺服电动缸选型参数表

DI190/DH190 servo electric cylinder parameter list selections

电机连接形式 Motor connection		同轴直线式 Coaxial Linear														
减速比 Reduction ratio		1			3			5			7			10		
丝杆导程 Screw lead	mm	20														
伺服电机功率 Servo motor power	KW	7.50	11.0	15.0	7.50	11.0	15.0	7.50	11.0	15.0	7.50	11.0	15.0	3.00	4.50	6.00
伺服电机扭矩 Servo motor torque	N.M	47.8	70.0	95.5	47.8	70.0	95.5	47.8	70.0	95.5	47.8	70.0	95.5	28.7	43.0	57.3
伺服电机转速 Servo motor speed	r/min	1500												1000		
电动缸推力 Thrust electric cylinder	KN	12.8	18.7	25.5	38.3	56.1	76.5	63.8	93.4	127	89.3	131	178	76.6	115	153
电动缸承受推力 Withstanding thrust electric cylinder	KN	150														
电缸额定速度 Electric cylinder rated speed	mm/s	500			165			100			70			30		

电机连接形式 Motor connection		同步带折返式 Timing belt Turn-back type														
减速比 Reduction ratio		1			2			5			7			10		
丝杆导程 Screw lead	mm	20														
伺服电机功率 Servo motor power	KW	7.50	11.0	15.0	7.50	11.0	15.0	7.50	11.0	15.0	7.50	11.0	15.0	3.00	4.50	6.00
伺服电机扭矩 Servo motor torque	N.M	47.8	70.0	95.5	47.8	70.0	95.5	47.8	70.0	95.5	47.8	70.0	95.5	28.7	43.0	57.3
伺服电机转速 Servo motor speed	r/min	1500												1000		
电动缸推力 Thrust electric cylinder	KN	12.8	18.7	25.5	25.5	37.4	51.0	63.8	93.4	127	89.3	131	178	76.6	115	153
电动缸承受推力 Withstanding thrust electric cylinder	KN	150														
电缸额定速度 Electric cylinder rated speed	mm/s	500			250			100			70			30		

电机连接形式 Motor connection		同轴直线式 Coaxial Linear														
减速比 Reduction ratio		1			3			5			7			10		
丝杆导程 Screw lead	mm	40														
伺服电机功率 Servo motor power	KW	7.50	11.0	15.0	7.50	11.0	15.0	7.50	11.0	15.0	7.50	11.0	15.0	7.50	11.0	15.0
伺服电机扭矩 Servo motor torque	N.M	47.8	70.0	95.5	47.8	70.0	95.5	47.8	70.0	95.5	47.8	70.0	95.5	47.8	70.0	95.5
伺服电机转速 Servo motor speed	r/min	1500														
电动缸推力 Thrust electric cylinder	KN	6.38	9.34	12.7	19.1	28.0	38.2	31.9	46.7	63.7	44.7	65.4	89.2	63.8	93.4	127
电动缸承受推力 Withstanding thrust electric cylinder	KN	150														
电缸额定速度 Electric cylinder rated speed	mm/s	1000			330			200			140			100		

电机连接形式 Motor connection		同步带折返式 Timing belt Turn-back type														
减速比 Reduction ratio		1			2			5			7			10		
丝杆导程 Screw lead	mm	40														
伺服电机功率 Servo motor power	KW	7.50	11.0	15.0	7.50	11.0	15.0	7.50	11.0	15.0	7.50	11.0	15.0	7.50	11.0	15.0
伺服电机扭矩 Servo motor torque	N.M	47.8	70.0	95.5	47.8	70.0	95.5	47.8	70.0	95.5	47.8	70.0	95.5	47.8	70.0	95.5
伺服电机转速 Servo motor speed	r/min	1500														
电动缸推力 Thrust electric cylinder	KN	6.38	9.34	12.7	12.8	18.7	25.5	31.9	46.7	63.7	44.7	65.4	89.2	63.8	93.4	127
电动缸承受推力 Withstanding thrust electric cylinder	KN	150														
电缸额定速度 Electric cylinder rated speed	mm/s	1000			500			200			140			100		

C2:内螺纹

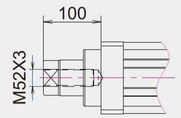

C3:关节轴承

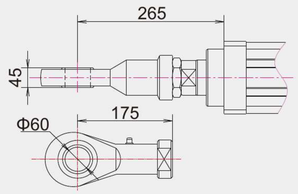

C4:U型插销

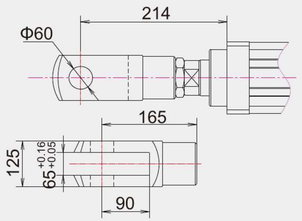

M1:前输出法兰

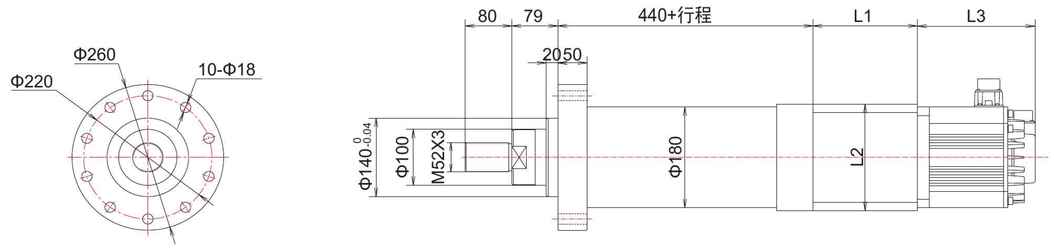

M2:卧式底座

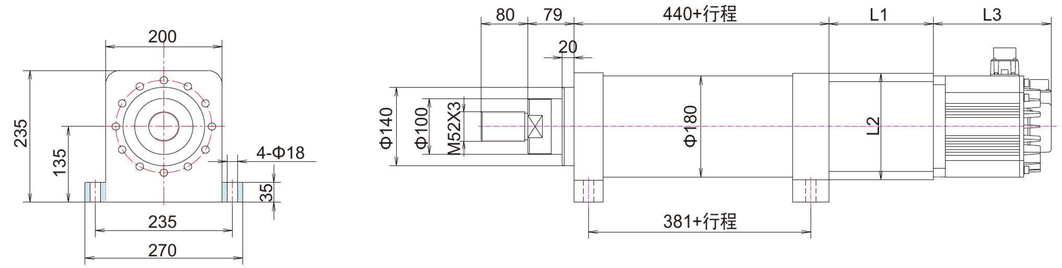

M4:后法兰耳轴

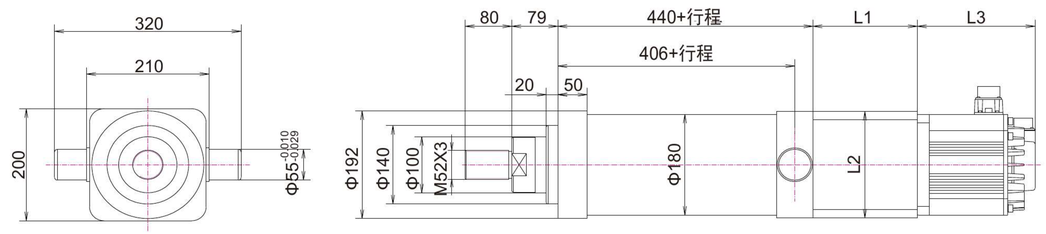

电机法兰	L1	L2	L3
180	210	180	202(请参考电机)
190	210	190	220(请参考电机)
220	250	220	250(请参考电机)

M1:前输出法兰

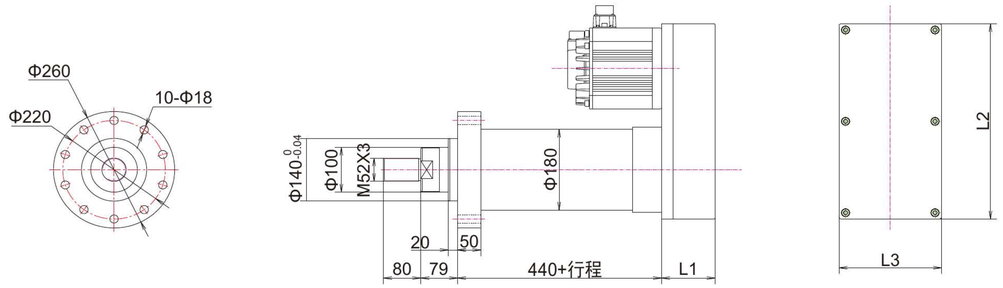

M2:卧式底座

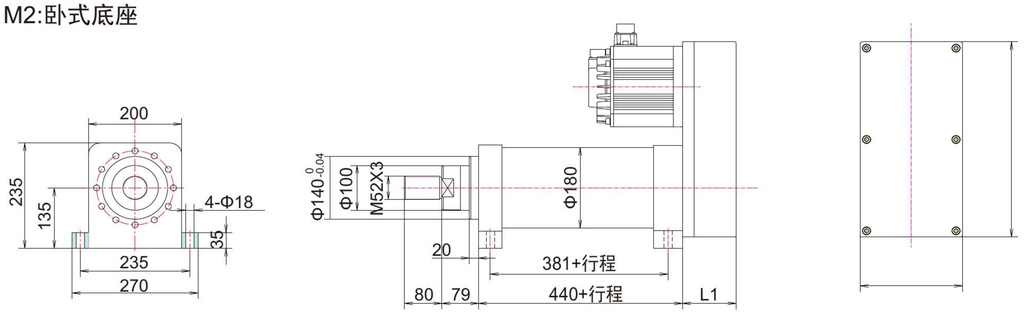

M3:尾部单耳轴

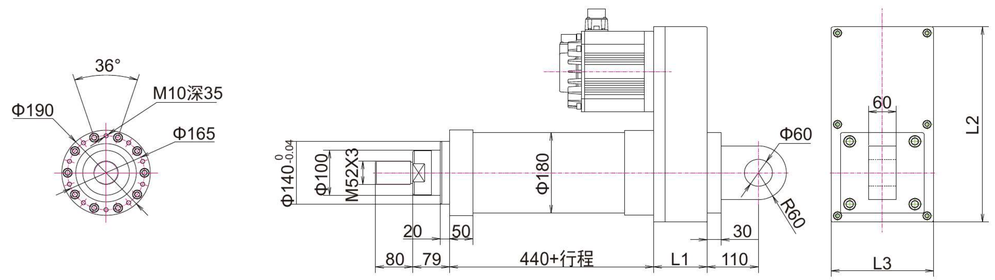

M4:后法兰耳轴

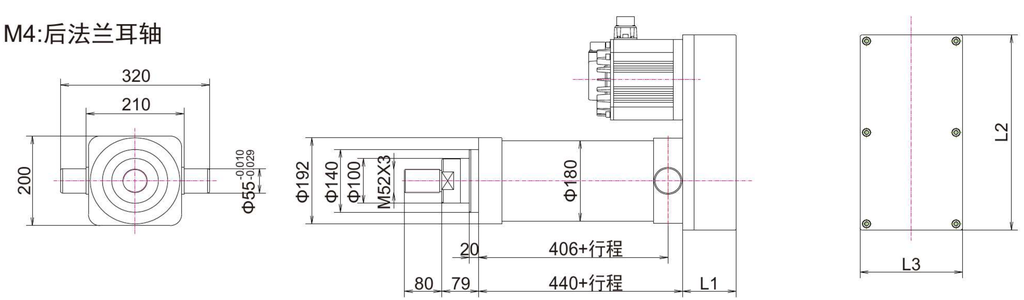

电机法兰	L1	L2	L3
180	165	480	220
190	165	480	220
220	165	480	220

DI250/DH250 伺服电动缸选型参数表

DI250/DH250 servo electric cylinder parameter list selections

电机连接形式 Motor connection		同轴直线式 Coaxial Linear														
减速比 Reduction ratio		1			3			5			10			20		
丝杆导程 Screw lead	mm	10														
伺服电机功率 Servo motor power	KW	7.50	11.0	15.0	7.50	11.0	15.0	7.50	11.0	15.0	3.00	4.50	6.00	0.90	2.00	3.00
伺服电机扭矩 Servo motor torque	N.M	47.8	70.0	95.5	47.8	70.0	95.5	47.8	70.0	95.5	27.7	43.0	57.3	8.59	19.1	28.7
伺服电机转速 Servo motor speed	r/min	1500									1000					
电动缸推力 Thrust electric cylinder	KN	25.5	37.4	51.0	76.6	112	153	128	187	255	153	230	306	91.7	204	306
电动缸承受推力 Withstanding thrust electric cylinder	KN	300														
电缸额定速度 Electric cylinder rated speed	mm/s	250			80			50			15			8		

电机连接形式 Motor connection		同步带折返式 Timing belt Turn-back type														
减速比 Reduction ratio		1			2			5			10			20		
丝杆导程 Screw lead	mm	10														
伺服电机功率 Servo motor power	KW	7.50	11.0	15.0	7.50	11.0	15.0	7.50	11.0	15.0	3.00	4.50	6.00	0.90	2.00	3.00
伺服电机扭矩 Servo motor torque	N.M	47.8	70.0	95.5	47.8	70.0	95.5	47.8	70.0	95.5	27.7	43.0	57.3	8.59	19.1	28.7
伺服电机转速 Servo motor speed	r/min	1500									1000					
电动缸推力 Thrust electric cylinder	KN	25.5	37.4	51.0	51.0	74.7	102	128	187	255	153	230	306	91.7	204	306
电动缸承受推力 Withstanding thrust electric cylinder	KN	300														
电缸额定速度 Electric cylinder rated speed	mm/s	250			125			50			15			8		

电机连接形式 Motor connection		同轴直线式 Coaxial Linear														
减速比 Reduction ratio		1			3			5			10			20		
丝杆导程 Screw lead	mm	16														
伺服电机功率 Servo motor power	KW	7.50	11.0	15.0	7.50	11.0	15.0	7.50	11.0	15.0	7.50	11.0	15.0	3.00	4.50	6.00
伺服电机扭矩 Servo motor torque	N.M	47.8	70.0	95.5	47.8	70.0	95.5	47.8	70.0	95.5	47.8	70.0	95.5	28.7	43.0	57.3
伺服电机转速 Servo motor speed	r/min	1500												1000		
电动缸推力 Thrust electric cylinder	KN	16.0	23.4	31.9	47.8	70.0	95.6	79.7	117	159	160	234	319	192	287	382
电动缸承受推力 Withstanding thrust electric cylinder	KN	300														
电缸额定速度 Electric cylinder rated speed	mm/s	400			130			80			40			10		

电机连接形式 Motor connection		同步带折返式 Timing belt Turn-back type														
减速比 Reduction ratio		1			2			5			10			20		
丝杆导程 Screw lead	mm	16														
伺服电机功率 Servo motor power	KW	7.50	11.0	15.0	7.50	11.0	15.0	7.50	11.0	15.0	7.50	11.0	15.0	3.00	4.50	6.00
伺服电机扭矩 Servo motor torque	N.M	47.8	70.0	95.5	47.8	70.0	95.5	47.8	70.0	95.5	47.8	70.0	95.5	28.7	43.0	57.3
伺服电机转速 Servo motor speed	r/min	1500												1000		
电动缸推力 Thrust electric cylinder	KN	16.0	23.4	31.9	31.9	46.7	63.7	79.7	117	159	160	234	319	192	287	382
电动缸承受推力 Withstanding thrust electric cylinder	KN	300														
电缸额定速度 Electric cylinder rated speed	mm/s	400			200			80			40			10		

DI250/DH250 伺服电动缸选型参数表

DI250/DH250 servo electric cylinder parameter list selections

电机连接形式 Motor connection		同轴直线式 Coaxial Linear														
减速比 Reduction ratio		1			3			5			10			20		
丝杆导程 Screw lead	mm	20														
伺服电机功率 Servo motor power	KW	7.50	11.0	15.0	7.50	11.0	15.0	7.50	11.0	15.0	7.50	11.0	15.0	3.00	4.50	6.00
伺服电机扭矩 Servo motor torque	N.M	47.8	70.0	95.5	47.8	70.0	95.5	47.8	70.0	95.5	47.8	70.0	95.5	28.7	43.0	57.3
伺服电机转速 Servo motor speed	r/min	1500												1000		
电动缸推力 Thrust electric cylinder	KN	12.8	18.7	25.5	38.3	56.1	76.5	63.8	93.4	127	128	187	255	153	230	306
电动缸承受推力 Withstanding thrust electric cylinder	KN	300														
电缸额定速度 Electric cylinder rated speed	mm/s	500			165			100			50			15		

电机连接形式 Motor connection		同步带折返式 Timing belt Turn-back type														
减速比 Reduction ratio		1			2			5			10			20		
丝杆导程 Screw lead	mm	20														
伺服电机功率 Servo motor power	KW	7.50	11.0	15.0	7.50	11.0	15.0	7.50	11.0	15.0	7.50	11.0	15.0	3.00	4.50	6.00
伺服电机扭矩 Servo motor torque	N.M	47.8	70.0	95.5	47.8	70.0	95.5	47.8	70.0	95.5	47.8	70.0	95.5	28.7	43.0	57.3
伺服电机转速 Servo motor speed	r/min	1500												1000		
电动缸推力 Thrust electric cylinder	KN	12.8	18.7	25.5	25.5	37.4	51.0	63.8	93.4	127	128	187	255	153	230	306
电动缸承受推力 Withstanding thrust electric cylinder	KN	300														
电缸额定速度 Electric cylinder rated speed	mm/s	500			250			100			50			15		

电机连接形式 Motor connection		同轴直线式 Coaxial Linear														
减速比 Reduction ratio		1			3			5			10			20		
丝杆导程 Screw lead	mm	40														
伺服电机功率 Servo motor power	KW	7.50	11.0	15.0	7.50	11.0	15.0	7.50	11.0	15.0	7.50	11.0	15.0	7.50	11.0	15.0
伺服电机扭矩 Servo motor torque	N.M	47.8	70.0	95.5	47.8	70.0	95.5	47.8	70.0	95.5	47.8	70.0	95.5	47.8	70.0	95.5
伺服电机转速 Servo motor speed	r/min	1500														
电动缸推力 Thrust electric cylinder	KN	6.38	9.34	12.7	19.1	28.0	38.2	31.9	46.7	63.7	63.8	93.4	127	128	187	255
电动缸承受推力 Withstanding thrust electric cylinder	KN	300														
电缸额定速度 Electric cylinder rated speed	mm/s	1000			330			200			100			50		

电机连接形式 Motor connection		同步带折返式 Timing belt Turn-back type														
减速比 Reduction ratio		1			2			5			10			20		
丝杆导程 Screw lead	mm	40														
伺服电机功率 Servo motor power	KW	7.50	11.0	15.0	7.50	11.0	15.0	7.50	11.0	15.0	7.50	11.0	15.0	7.50	11.0	15.0
伺服电机扭矩 Servo motor torque	N.M	47.8	70.0	95.5	47.8	70.0	95.5	47.8	70.0	95.5	47.8	70.0	95.5	47.8	70.0	95.5
伺服电机转速 Servo motor speed	r/min	1500														
电动缸推力 Thrust electric cylinder	KN	6.38	9.34	12.7	12.8	18.7	25.5	31.9	46.7	63.7	63.8	93.4	127	128	187	255
电动缸承受推力 Withstanding thrust electric cylinder	KN	300														
电缸额定速度 Electric cylinder rated speed	mm/s	1000			500			200			100			50		

C2:内螺纹

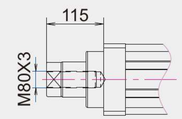

C3:关节轴承

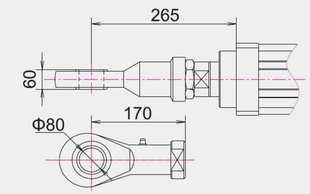

C4:U型插销

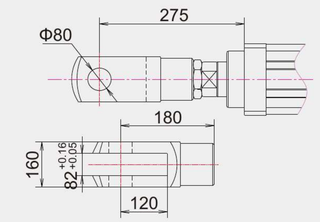

M1:前输出法兰

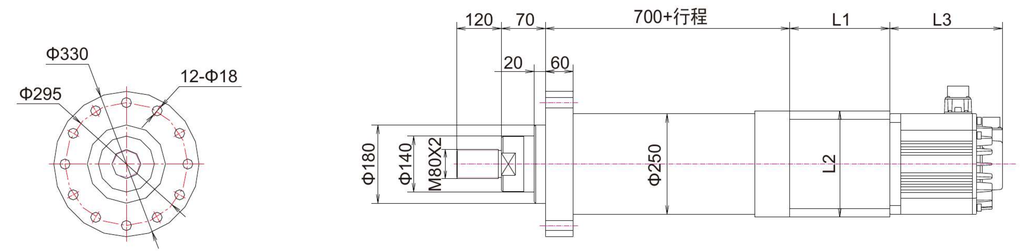

M2:卧式底座

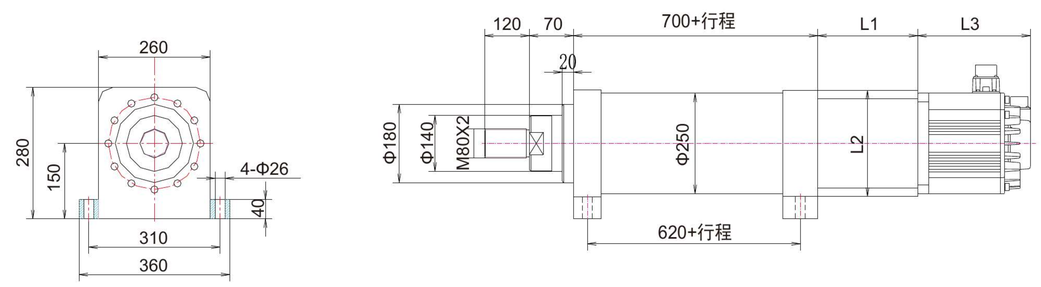

M4:后法兰耳轴

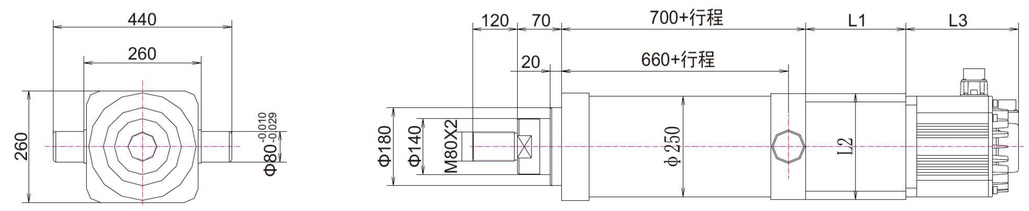

电机法兰	L1	L2	L3
190	230	190	220(请参考电机)
220	280	220	250(请参考电机)
250	320	250	300(请参考电机)

M1:前输出法兰

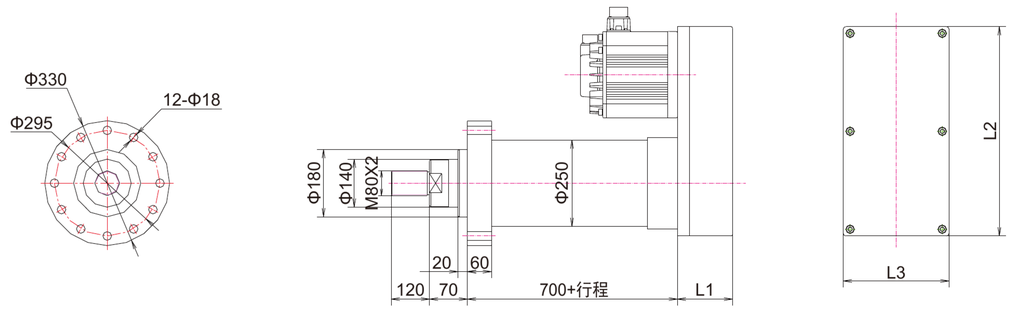

M2:卧式底座

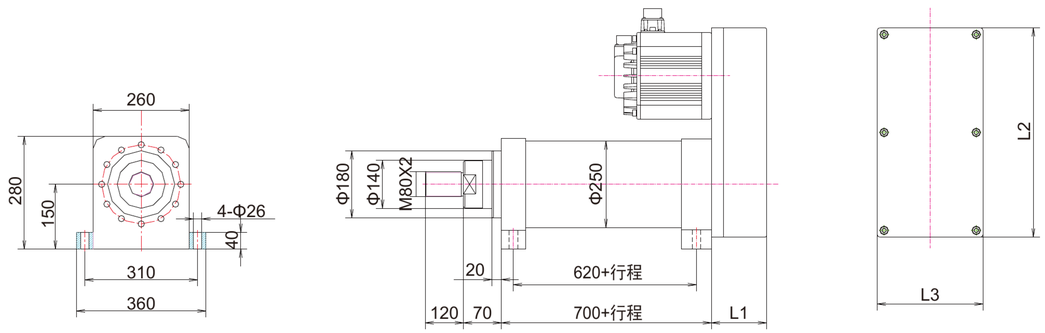

M4:后法兰耳轴

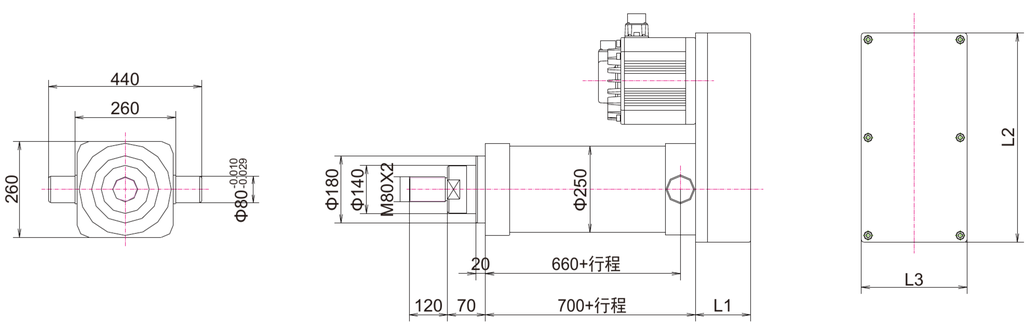

电机法兰	L1	L2	L3
190	185	436	190
220	185	480	220
250	185	520	250

THREE SIX MULTI

FREE MOTION PLATFORM
自由度运动平台

THREE FREE motion platform

三自由度运动平台

三自由度运动平台是由三支电动缸，上、下各六只万向铰链和上、下两个平台组成，下平台固定在基础上，借助三只电动缸的伸缩运动，完成上平台在空间六个自由度（X，Y，Z）的运动，从而可以模拟出各种空间运动姿态。三自由度运动平台涉及到机械、液压、电气、控制、计算机、传感器，空间运动数学模型、实时信号传输处理等一系列高科技领域，因此三自由度运动平台是控制领域水平的标志性象征。主要包括平台的空间运动机构、空间运动模型、液压系统、控制系统。

Three degrees of freedom motion platform is composed of three electric cylinder, for upper and lower six universal joints and upper and lower platforms, with the lower platformFixed basis, with three electric cylinder telescopic movement, the completion of the platform space six degrees of freedom (X, Y, Z) movement,Which can simulate a variety of spatial movement of posture. Three degrees of freedom motion platform involves mechanical, hydraulic, electrical,
control, computer, communication A series of high-tech field sensor, a mathematical model of space motion, real-time signal processing, transmission, and therefore three degrees of freedom motion platform is a control collarLevel domain iconic symbol. Including space motion mechanism platform, spatial motion model, hydraulic system, control system.

主要功能
the main function

01

位姿模拟、正弦波模拟单自由度运动、三自由度复合运动。

Pose analog sine wave motion simulate a single degree of freedom, three degrees of freedom composite motion.

02

路谱滤波处理，随机波复现，路谱、海浪谱、飞行谱复现等功能。

Road spectral filter processing, random wave reproduction, road spectrum, wave spectrum, flight spectrum reproduction and other functions.

03

通过TCP/IP协议，为用户提供第三方控制接口（上位机接口）。

TCP / IP protocol, to provide users with third-party control interface (PC interface).

04

提供内同步、外同步数据输出控制接口。

Provide internal synchronization and external synchronization data output control interface.

三自由度运动平台基本参数
The basic parameters of three degrees of freedom motion platform

型号 model		DX3 -100	DX3 -200	DX3 -500	DX3 -1000	DX3 -2000	DX3 -5000	DX3 -10000
效率 Rated load	Kg	100	200	500	1000	2000	5000	10000
横摇 Rolling	°	±10° / ±20° / ±30° / ±45° / ±60°						
纵摇 Pitching	°	±10° / ±20° / ±30° / ±45° / ±60°						
艏摇 Bow shake	°	±10° / ±20° / ±30° / ±45° / ±60° / 360°						
升降 Lift		±300						
周期 Cycle	s	3~15						

自由度运动平台
FREE MOTION PLATFORM

MULTI -degree of freedom motion platform

多自由度运动平台

推出多种规格、上百个项目的全电动多自由度平台系统。平台种 类包含单自由度震动平台，2 / 3 / 4 / 5 / 6自由度平台。实现了部分或者完全替代市场上原有的液压平台， 由于使用了电动控制， 省略了液压泵站、配管等周围设备， 简化了整个装置， 除去了由于使用液压油而产生的跑、冒、滴、漏等现象， 免去了液压油的污染控制等繁琐的维护保养工作， 大幅度地减少了功率损耗， 提高了这个系统的效率。同时由于使用了全电动控制， 提高了系统的控制精度和控制稳定性， 大大地提高了系统的安全性和可靠性。

Wyatt launched a variety of specifications, more than 100 items electric multi-degree of freedom platform system. Platform type contains a single-degree-of-freedom vibration platform, 2/3M/5/6 DOF platform. Partially or completely replace the original hydraulic platform, omitted due to the use of the electric control around the pump stations, piping equipment, simplifying the entire device, removing the running due to the use of hydraulic oil, run, drip, drain phenomena such as eliminating the need for tedious maintenance work of the hydraulic oil pollution control, significantly reducing the power loss and improve the efficiency of the system. The same time due to the use of all-electric control, to improve the accuracy and control stability of the control of the system, and greatly improve the safety and reliability of the system.

01

全数字化闭环伺服控制， 专业多轴运动控制卡保证运动的平滑性以及高仿真性， 减少动感漂移和失真。

Full digital closed-loop servo control, professional multi-axis motion control card to ensure smooth movement and high simulation, reducing the dynamic drift and distortion.

02

全新的模块化组合及自由灵活的系统集成， 满足客户的不同需求。

New modular combination and the freedom and flexibility of system integration, to meet the different needs of customers

03

高精度、高刚性电动缸驱动系统及平台组合， 保证平台系统的高刚性和高效率。

High-precision, high-rigidity electric cylinder drive system and platform combinations to ensure high rigidity and high efficiency of the platform.

04

多重机械、电气安全保护， 保证平台系统的绝对安全。

Multiple mechanical, electrical, security, guarantee the absolute security of the platform system.

05

高响应、高速、高加速度和低噪音， 满足各种运行环境的要求。

High response, high-speed, acceleration and low noise, to meet the requirements of a variety of operating environments

06

可视性好， 人机界面， 设定容易， 操作简单。

Visibility good man-machine interface, Easy to set up and simple to operate.

07

节省能源、保护环境、免去维护、使用寿命长

Energy saving, environmental protection, eliminating the need to maintain long-term service life.

自由度运动平台

全电动多自由度平台分为两大种类， 模拟仿真用的动感平台和精密度定位测试用平台。模拟仿真 用动感平台的有效载荷范围为0 . 2 5吨- 2 0吨， 这些模拟仿真动感平台通过接受来自上位机控制的状态信号， 控制平台的运动， 广泛应用在各种训练模拟器如飞行操纵模拟器、舰艇操纵模拟器、直升机操纵模拟平台、坦 克操纵模拟器、汽车驾驶模拟器、火车驾驶模拟器、地震模拟器以及动感电影、娱乐设备等领域。

The all-electric multi-degree-of-freedom platform is divided into two types, analog simulation with dynamic platform and precision positioning test platform. Analog simulation with dynamic platform payload range of 0.25 tons -20tons, the simulation dynamic platform by accepting the status signal from the host control, movement control platform, widely used in a variety of training simulators such as flight control simulator, warships Handling Simulator Helicopter manipulating simulation platform, tanks maneuvering simulator car driving simulator, train driving simulator, earthquake simulators, and dynamic film, entertainment equipment and other fields.

精密度定位测试用多自由度平台的有效载荷为0 . 5吨- 5 0吨,位置控制精度达到0.02mm.广泛应用在各种汽车姿态测试设备,飞机/导弹等飞行器飞行姿态测试设备等精明测试多自由度平台,以及空间宇宙飞船的对接,空中加油机的加油对接,同时利用多自由度精密定位机构,可以形成高刚度,高精度的多自由度加工机械和装配机械手,广泛应用于各种复杂的特种加工、复杂装配和飞机装配、卫星装配等。

Precision positioning test multi-degree of freedom platform payload of 0.5 tons -50 tons, position control accuracy of 0.02mm.Widely used in posture testing of a variety of automotive equipment, aircraft / missiles, aircraft flight attitude test equipment, such as smart testing multi-degree-of-freedom platform, as well as space spacecraft docking air tanker refueling docking, while taking advantage of multi-DOF precision positioning mechanism, can form a high-rigidity, high-precision multi- degree-of-freed on processing machinery and assembly robot, are widely used in a variety of complex machining, complex assembly, suchas aircraft assembly and satellite assembly.

在平台的开发、设计的工程中积累了大量的实际应用技术和经验，具备很强的客户化设计能力， 可以根据您的不同要求，进行合理设计，优化参数， 提供不同特性参数的2 / 3 / 4 / 5 / 6 / 7自由度平台， 并为您提供细致周到的技术咨询和完善的售后服务。

The in platform development, engineering design, has accumulated a lot of the practical application of technology and experience, strong customer design according to your different requirements, reasonable design, optimization parameters,
different characteristic parameters 2 / 3 /4/ 5 /6 / 7 degree of freedom platform and to provide attentive technical

SIX FREE motion platform

六自由度运动平台

型号 model		DX6 -100	DX6 -200	DX6 -500	DX6 -1000	DX6 -2000	DX6 -5000	DX6 -10000
额定负载	kg	100	200	500	1000	2000	5000	
台面尺寸	mm	500X500 / 1000X1000 / 2000X2000 / 3000X3000 / 4000X4000 / 5000X5000 / Ч6000X6000						
频率范围	Hz	5 / 10 / 50 / 100 / 120						
最大位置	mm	±10 / ±20 / ±50 / ±80 / ±100 / ±200						
最大加速度	m/s²	10 / 20 / 50 / 100						
最大负荷	t	50 t						

型号 model	型号 model	型号 model	型号 model
前后移动 Moving around	±550mm	500mm/s	1g
左右移动 Move around	±500mm	500mm/s	1g
上下升降 Up and down	±400mm	500mm/s	1g
俯仰角度 Pitch angle	±30°	50°/s	1000°/s2
侧倾角度 Roll angle	±35°	50°/s	1000°/s2
偏航角度 Yaw angle	±45°	50°/s	1000°/s2

伺服电动缸和传动液压缸、气缸的对比

Comparison of the electric servo cylinder and the traditional hydraulic cylinders,cylinder

	项目Items	电动缸SIEEElectric Cylinders	液压缸Hydraulic Cylinders	气缸Pneumatic Cylinders
成本比较 Cost Contest	操作方式 Operations	简单,既插既用 Easy	复杂 Complex	复杂 Complex
	环境影响 Environ mental	无污染、环保 Pollution-free	经常漏油 Hydraulic Fluid Leaks	噪音较大 High Noise Levels
	安全隐患 Safety	安全，几乎无隐患 Safe	有油泄漏 Hidden Danger/Oil	有气泄漏 Hidden Danger/Gas
	能源应用 Energy	节约能源 Save	损耗大 Waste (Oil)	损耗大 Waste (Gas)
	寿命 Lifetime	超长 Very Long	较长（维护得当） Can be long with proper maintenance	较长（维护得当） Can be long with proper maintenance
	维护保养 Maintenance	几乎免维护 Low	经常高成本维护 Very High	定期高成本维护 Very High
	性价比 Prices	高 High	较低 Moderate	较低 Low
功能比较 Function Contest	速度 Velocity	很高 Very High	中等 Moderate	很高 High
	加速度 Acceleration	很高 Very High	较高 Moderate	很高 High
	刚性 Rigidity	超高 Very High	较低且不稳定 Moderate	很低 Low
	承载能力 Load Ability	很强 Strong	很强 Strong	中等 Moderate
	抗冲击载荷能力 Shock Load	很强 Strong	很强 Strong	较强 Moderate
	传递效率 Efficiency	>90%	<50%	<50%
	定位控制 Location Control	非常简单 Easy	复杂 Hard	复杂 Hard
	定位精度 Location Precision	很高 Very High	一般 Moderate	一般 Moderate

应用领域 *Applications*

- 军事装备：雷达、导弹起坚架、装甲车要百台、特种设备等战舰与飞机的舱门开启，座位高低调节，武器随动系统执行机构，实验升降支架、坦克的火炮高低向动作调节，火箭燃料推送、炉门开启等。
- 专用设备:工业自动化生产线、装配线、物流传送、升降台、调偏控制、阀门控制、坐标机械手、机械设备、咖玛力、食品医药行业、数控机床、行业包装机、汽车电子压装机、纺织设备卷绕机分度、模具位置控制、夹紧、钻孔、定位。
- 实验设备：仿真平台、试验台、造波机、检测设备等。
- Military Equipment Radar, missile erecting support, swaying platform of armored car, special equipment, cabin door of warship and plane opening,height adjustment of seat, weapon servo system actuator,experimental lifing mechanism, heiht adjustment of artillery of tank, rocket fuel pushing, furnace door opening.
- Special Equipment: Automatic production line, assembly line, logistics transmission, elevating platforms, leaning adjustment, valve control, coor dinates manipulator, mechanicaldevice, Ct gamma, food and pharmaceuticals industry, numerical control machine, industry packing device,auto motive electronic press machine, winding machine dividing of textile device , and mold position control, clamping, drilling andpositioning of mole.
- Experimental Equipment: Simulation platform, test bed, wave machine, checkout equipment etc.

使用寿命与维护 *Service life and maintenance*

电动缸的寿命主要取决于丝杠和轴承的寿命。我们的设计将轴承的承载能力大于丝杠。其影响因素是金属的疲劳，在不同的速度下负载受力不同，作用时间不同，加速度不同都会有影响。所以很难精确确定。建议您在估算时，按照同样丝杠在同样环境下工作，以其使用寿命的90%计算。

- 电动缸在出厂时丝杠上已经加上润滑脂GB7324-1994通用锂基润滑脂3号。
- 电动缸工作达到300小时后，应对润滑脂进行补加。根据使用的环境和每天运行的时间来确定加油的次数，一般情况下，每2000小时加一次。
- 加油方法：将电动缸外壳上的注油孔打开，转动丝杠，找到丝杠母上的注油孔，注入润滑脂。
- 润滑脂要求：GB7324-199通用锂基润滑脂3号。

Lifetime of electric cylinders depend on the ball screw and bearing's lifetime. In our design, loading ability of the bearing more than ball screw, metal fatigueis the main influencing factors, but the different of speedN load、acceleration、working time will also affect its lifetime cycle，so its too hardto accurately calculate .It is a suggestion for estimating to calculate by 90% of the service life as the same screw is running under the same environment.

- Electric cylinder is refueled with lubricating grease GB7324-1994 general lithium base 3 lubricating grease when eaves factory.
- After electric cylinder has run for 300 hours, refill the lubricating grease. Refueling frequency , per 2000hours one time as usual, is determinedon basis of the operating environment and day-to-day operational time.
- Refuelling method: ope the filler hole on the shell of electric cylinder, turn the screw to find the filler hole on the screw nut and refuellubricating grease.
- Requirement for lubricating grease: GB7324-1994 general lithium base 3 lubricating grease

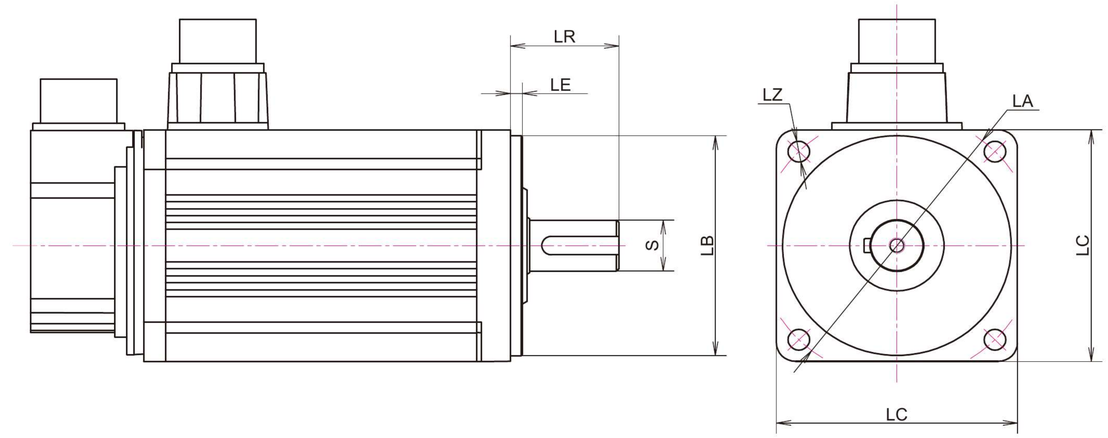

常用伺服电机尺寸表 *Common servo motor size table*

型号 Model	LA	LZ	S	LB	LR	LE	LC
40	43.8	4-φ3.4	8	30	25	3	40
60	70	4-φ4.5	11/14	50	30	3	60
80	90	4-φ6	19	70	35	3	80
90	100	4-φ6.5	16/19	80	35	3	90
100	115	4-φ9	19	95	55	5	100
110	130	4-φ9	19/22	95	55	5	110
130	145/130	4-φ9	22/24	110	65	6	130
150	165	4-φ11	28/32	130	65	6	150
180	200	4-φ13.5	35/42	114.3	80/115	6	180
190	215	4-φ14	38/42	180	80	6	190
220	235	4-φ14	55	200	110	6	220
250	265	4-φ14	60/65	230	140	6	250
280	300	4-φ18	55/70	250	140	6	280
320	350	4-φ20	80	300	170	6	320

常用步进电机尺寸表 *Common stepper moto size table*

型号 Model	LA	LZ	S	LB	LR	LE	LC
42	43.8	4-M3	5	22	24	2	42.3
57	66.6	4-φ4.6	6.35	38.1	20.6	1.6	56.4
86	98.3	4-φ6.6	12.7/14	73	30	2	86
110	132	4-φ9	16/19	85	35	4	110
130	155	4-φ11	24	100	50	3	132

橡塑设备
Rubber Equipment

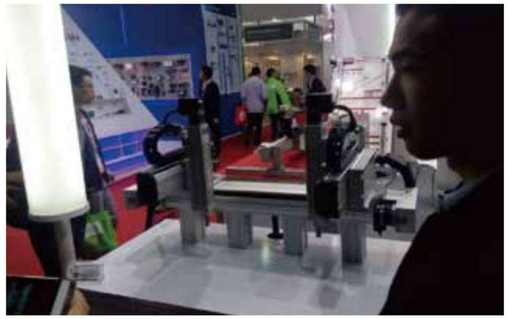

电子组装设备
Electronic Assembly Equipment

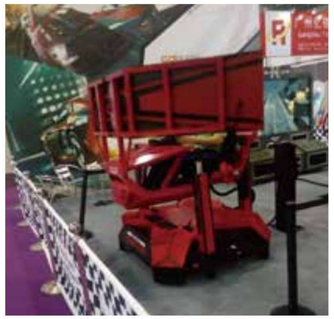

模拟赛车
Simulation Racing

娱乐9D设备
Entertainment 9D Equipment

VR娱乐设备
VR Entertainment Devices

手机装配设备
Phone Assembly Equipment

伺服压力机
Servo Presses

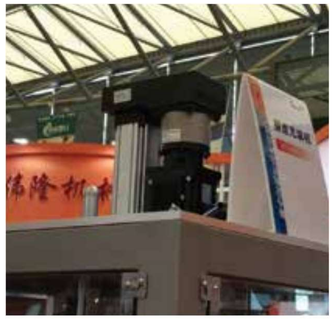

整盘充填机
Full Disk Filling Machine

生产线自动化
Production Line Automation

汽车模具压装备
Auto Mold Pressure Equipment

复卷机
Rewinder

模拟驾驶
Driving Simulation

零件压装备
Pressure Equipment Parts

机器人
Robot

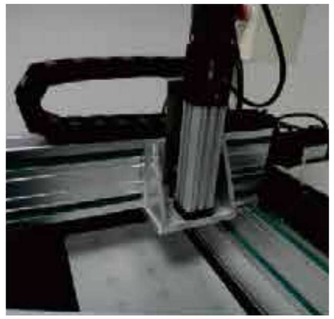

坐标机器人
Coordinates Robot

产生移载机械手
Generating Transfer Robot

生产线组装
Production Line Assembly

军工航空
Military aviation

雷达车辆
Radar vehicle

精密送料
Precision feeding

货物搬运
Cargo handling

动感座椅
Dynamic seat

气体阀压力检测机
Gas valve pressure detector

检测设备
Testing Equipment

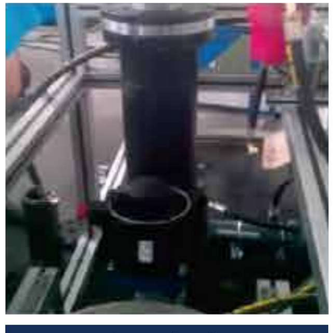

伺服压力研体
Research sevo pressure machine

全自动高速吸塑成型机
High-speed automatic plastic molding machiness

汽车模拟驾驶
Car Driving Simulator

地震模拟平台
Earthquake Simulation Platform

六自由度并联机床
6 - DOF Parallel Machine Tool

飞机模拟
Flight Simulators

电动飞行模拟器
Electric Flight Simulator

七自由度车箱
7 - freedom compartment


深圳航空
Shenzhen Airlines
THALES

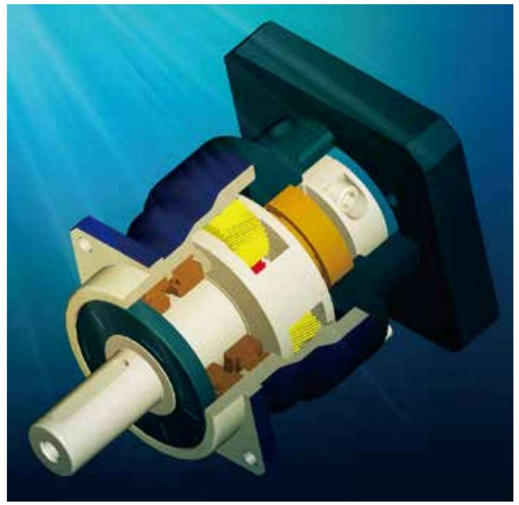

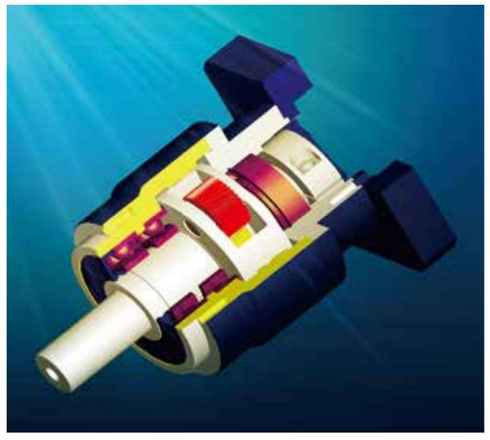

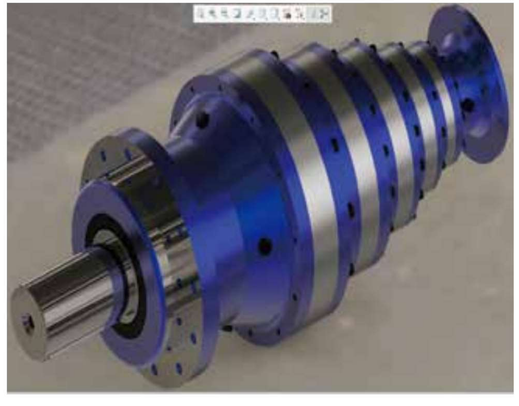

杭州好力徕机电有限公司

SIEMEC